Electricity Meters
Residential

Residential AMI electricity meter

Landis + Gyr E350
U1200

User Manual

Revision history

Version	Date	Comments
1.00	09.07.10	First release. Meter Firmware 1.0
1.00	11.08.10	Second release of version 1.0. Update the Load Profile Storage on page 2, 38 and other typographical updates.
1.10	28.05.13	Updated Scroll/Alt button on pages 58-60, LAN/HAN indicators and Comms Display item on page 61, meter events table on page 74, General Characteristics(time keeping) on page 73 and replaced incorrect statement regarding password hierarchy on page 57.
4.8	22.09.16	Updates for FW R4.8.
4.8.1	12.03.18	Information on touch currents added to installation section on page 73.

Important Information
This document provides information relating to the U1300 meter.

Landis & Gyr Pty Ltd (ABN 78 002 894 224) trading as Landis+Gyr.

Copyright ©, Landis+Gyr. All rights reserved. No part of this document may be reproduced, stored in a retrieval system or transmitted in any form or by any means without the prior written permission of Landis+Gyr. Product specifications and operating details are subject to change without notice.

This document is prepared for engineers, installers and technicians by Landis+Gyr in good faith and as far as possible is based on data or sources which are believed to be reliable. Landis+Gyr accepts no liability for errors in this material. Before using any information contained in this document, the user must evaluate and determine if it is suitable for the intended application and shall assume all risks and liabilities associated with such use. Products must be used and installed by a qualified person in accordance with all applicable laws, regulations, industry standards, codes and rules.

Whilst Landis+Gyr has taken all reasonable care in reviewing the information in this document, Landis+Gyr makes no representations in respect of, gives no guarantees or undertakings in relation to, and to the maximum extent permitted by law, excludes all warranties in relation to, the accuracy or completeness of the information in this document. Prospective users of this information should make their own enquiries as to its accuracy and reliability.

All Landis+Gyr products and solutions have been designed and developed for the best possible performance. Functionality of the Product may vary depending on the system environment. You must use solutions and products recommended or approved by Landis+Gyr and are expressly prohibited from modifying, changing or otherwise altering a Product or solution.

Landis+Gyr, its officers, employees, directors, contractors and any representative excludes all liability whatsoever for any loss or damage, however arising out of: (a) the use of non-recommended or approved solutions or the use of a modified, altered or changed Product or Product Solution; or (b) a user's reliance, in whole or in part on any information in this document.

Any brand or product names mentioned in this manual may be trademarks or registered trademarks of their respective owners used here for identification only. Information on third party products are provided for information purposes. Landis+Gyr does not accept any liability for change, accuracy and completeness of this material provided for third party products.

Support
For any further product questions and support, please contact sales.au@landisgyr.com or alternatively call 1 300 252 634.
For international callers, contact number is +61 2 9690 7333.

Landis+Gyr
O'Riordan Street
Mascot NSW 2020
Australia

+61 2 9690 7333

sales.au@landisgyr.com

www.landisgyr.com

Contents

REVISION HISTORY **2**

INTRODUCTION **5**

SAFETY **7**

SAFETY INFORMATION 7
RESPONSIBILITIES 7
SAFETY REGULATIONS 7

CHAPTER 1 MAJOR FEATURES **9**

GENERAL DESCRIPTION 10
FRONT PANEL 11
STORAGE AND TRANSPORT 12
SAFETY CONSIDERATIONS 12
METER DIMENSIONS 13

CHAPTER 2 BASIC METER FUNCTIONS **15**

CALENDER CLOCK 15
LOAD PROFILE 16
REGISTERS 18
QUALITY OF SUPPLY MONITORING 19
LOW BURDEN AND LOW STARTING CURRENT 20
EVENT LOG 20
FRAUD DETECTION AND PREVENTION 20
MODULAR COMMUNICATION 20
PROGRAMMABLE DISPLAY 21
FOUR QUADRANT METERING 21

CHAPTER 3 AMI METER OPERATION **22**

U1200 METER 22
METER MEMORY 22
TIME-OF-USE 22
LOAD CONTROL RELAY 22
DISCONNECT BREAKER 23
QUALITY-OF-SUPPLY MONITORING 25
FRAUD PREVENTION AND DETECTION 27

CHAPTER 4 GROSS AND NETT METERING **28**

CHAPTER 5 METER COMMUNICATION **29**

OVERVIEW 29
WAN/LAN COMMUNICATION 29
LOCAL COMMUNICATION 29

CHAPTER 6 PROGRAMMING U1200 METERS **32**

METERDEV - PROGRAM DEVELOPER 33
METERCOMM - COMMUNICATION 33
METER-SPECIFIC PARAMETERS 33
SERIAL NUMBER 33
ACCOUNT ID 33
TIME SETTING 34
REMOTE COMMUNICATION 35
TOU ENERGY REGISTERS 37
TOU SWITCH TABLE 38
RATE SWITCH POINTS 38
TOU RECURRING DATES 40
RECURRING DATES (CONFIGURATION) 41

Non Recurring Dates 42
Load Profile Group Settings 44
Load Profile Recording 45
Quality of Supply 46
Normal Display 48
Alternative 1 and 2 Display 50
Relay Setting 51
Supply Capacity Limit 53
Auto Disconnect 56
Load configuration 58
Event Logging and Alarms 61
Program summary 62
Security 63
EMPWIN+ security access 64

CHAPTER 7 USING THE METER ON-SITE 66

Layout 66
Reading the Display 67
Reading the status information 68
Event log 69

CHAPTER 8 INSTALLATION 72

Storage and Transport 72
Safety Considerations 72
Mechanical Installation 74
Mounting and drilling template 75
Meter Dimensions 76
Supply Connections 77
Module installation 78

APPENDIX A - SPECIFICATIONS 79

APPENDIX B – EVENT TABLE 81

APPENDIX C – REGULATORY COMPLIANCE 84

APPENDIX D – ACCESSORIES 85

APPENDIX G – GLOSSARY 86

Introduction

Range of validity

The present user manual applies to the E350 interval electricity meter variant U1200 single phase.

Purpose

The user manual contains all the information required for application of the meters for the intended purpose. This includes:

- Provision of knowledge concerning characteristics, construction and function of the meters
- Information about possible dangers, their consequences and measures to prevent any danger
- Details concerning the performance of all work throughout the service life of the meters (parameterization, installation, commissioning, operation, maintenance, shutting down and disposal)

Target group

The contents of this user manual are intended for technically qualified personnel of utilities (energy supply companies) responsible for the system planning, installation and commissioning, operation, maintenance, decommissioning and disposal of the meters.

Reference documents

In addition, the following documents provide more information related to the subject of this document:

- U1200 Factsheet
- EMPWin+ User Manual

Metering Conventions

To comply with AS 4140-1995 (Metering and utility information exchange), this manual uses the terms *Import metering* and *Export metering* based on the customer perception. These replace the previously used terms ‘delivered’ and ‘received’ based on the supply authority perception:

Energy imported by customer = Energy delivered by supply authority

Energy exported by customer = Energy received by supply authority

Terms and abbreviations

A list of terms and abbreviations used in this document is available in section **Error! Reference source not found.** “**Error! Reference source not found.**”.

Safety information

Attention is drawn as follows in the individual chapters of this user manual with classified word symbols and pictographs to the relevant danger level, i.e. the severity and probability of any danger:

Definition of Danger
For a possibly dangerous situation, which could result in severe physical injury or fatality.

Definition of Warning
For a possibly dangerous situation, which could result in minor physical injury or material damage.

Definition of Note
For general details and other useful information to simplify the work.

In addition to the danger level, all safety information also describes the type and source of the danger, its possible consequences and measures to counteract the danger.

Responsibilities

The owner of the meters – usually the utility company – is responsible that all persons engaged on work with meters:

- Have read and understood the relevant sections of the user manual.
- Are sufficiently qualified for the work to be performed.
- Strictly observe the safety regulations (according to section 0) and the operating information in the individual chapters.

In particular, the owner of the meters bears responsibility for the protection of persons, prevention of material damage and the training of personnel. Landis+Gyr provides training courses for this purpose on specific equipment; please contact the relevant agent if interested.

Safety regulations

The following safety regulations must be observed at all times:

- The meter connections must not be live during installation or when opening. Contact with live parts is dangerous to life. The relevant main fuses should therefore be removed and kept in a safe place until the work is completed, so that other persons cannot replace them unnoticed.
- Local safety regulations must be observed. Only technically qualified and suitably trained personnel is authorised to install the meters.
- The meters must be held securely during installation. They can cause injuries if dropped.

- Meters which have fallen, must not be installed, even if no damage is apparent, but must be returned for testing to the service and repair department responsible (or the manufacturer). Internal damage can result in functional disorders or short-circuits.
- The meters must on no account be cleaned with running water or with compressed air devices. Water penetrating can cause short-circuits.

Chapter 1
Major Features

The U1200 meter has been designed to have a plug in, field upgradeable communication module for LAN and HAN communications. The meter has been primarily designed as a meter which supports AMI functionality, however it can also work as a standalone Non-AMI meter.

U1200 meter features:

- Class 1 Accuracy
- Supports Type 4, 5 and 6 installation
- NMI M6 Pattern approval
- 7 digit Liquid Crystal Display
- Non-volatile memory
- Real Time Clock function
- 15+ year Design life
- Four Quadrant measurement
- Up to 2376 Days of Load profiling Recording (Interval data)
- Time-of-Use tariff
- Disconnect Relay (100A)
- Integrated Load control relay (40A)
- Enhanced QOS & Supply capacity control
- Event management
- Programmable meter configuration
- Plug - N - Play communication system
- Optical communication for local communication
- ANSI C12.18/21 protocol for Communication module
- ANSI C12.19 Data structures
- Self Registration of meters

General Description

The U1200 meter is designed for 240 Volt 50 Hertz distribution systems, and it is a direct-connect with a maximum load of 100 amperes and a base current (I_b) of 10 amperes.

The meter's is compliant to Australian Standard 62053.21 and 62052.11.

Figure 1.1 U1200 electronic meter

Front panel

The meter's front panel has a LCD, two push buttons, a name plate and test LEDs. The custom-designed LCD can be read in a wide range of lighting conditions. It has been designed to provide optimum viewing with the meter mounted at eye level and above, in accordance with normal utility practices.

The LCD display shows information on Consumption, Load control, Disconnect relay, tariff rates, and energy directions. Various annunciators are included in the display to provide additional information about the quantity displayed with a display identification number. The displayable items sequence order, display hold time, decimal places and energy digits are all set in the meter's program which is detailed in chapter 4.

There are two visible RED test LEDs available on the U1200 meter. The LEDs are used to indicate active energy (Wh) and reactive energy pulses (varh). The push buttons are configured for display scrolling and Boost/ Reconnect functionality.

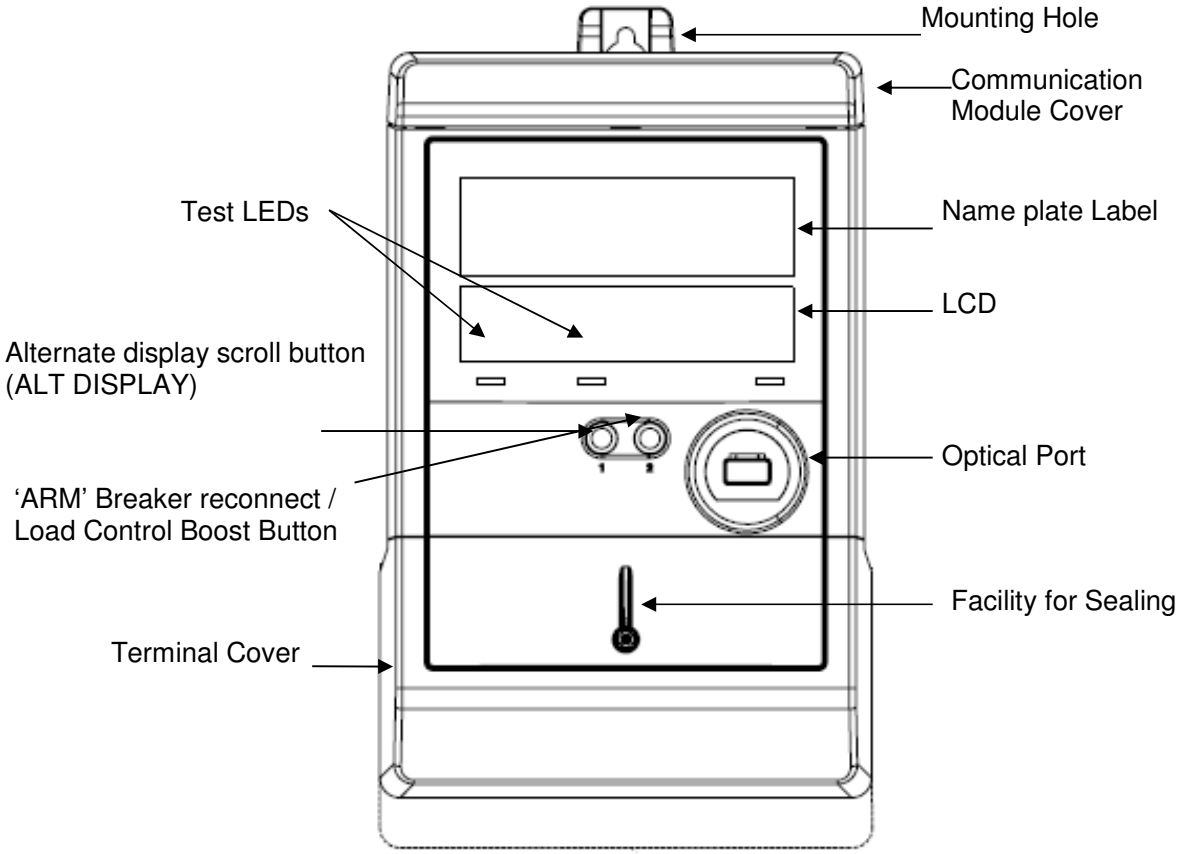

Figure 1.2 The U1200 Meter Layout

Storage and Transport

WARNING

The meter should be stored and transported in its original packing or an equivalent level of packaging.

The meters should be checked for physical damage after transportation.

The meters are packaged 6 in a carton for transporting. Larger quantities are generally supplied on pallets with shrink wrap plastic cover.

Safety Considerations

DANGER

Disconnect the supply when installing or servicing a meter

To avoid possible damage to the meter, at no time, any voltage in excess of 300 volts should be applied to this meter.

The meter is sealed to maintain the security and prevent unauthorised access or opening of the meter. As per NMI regulation, a verification number has been provided on the nameplate and on the seal fitted to the main cover.

Meter Dimensions

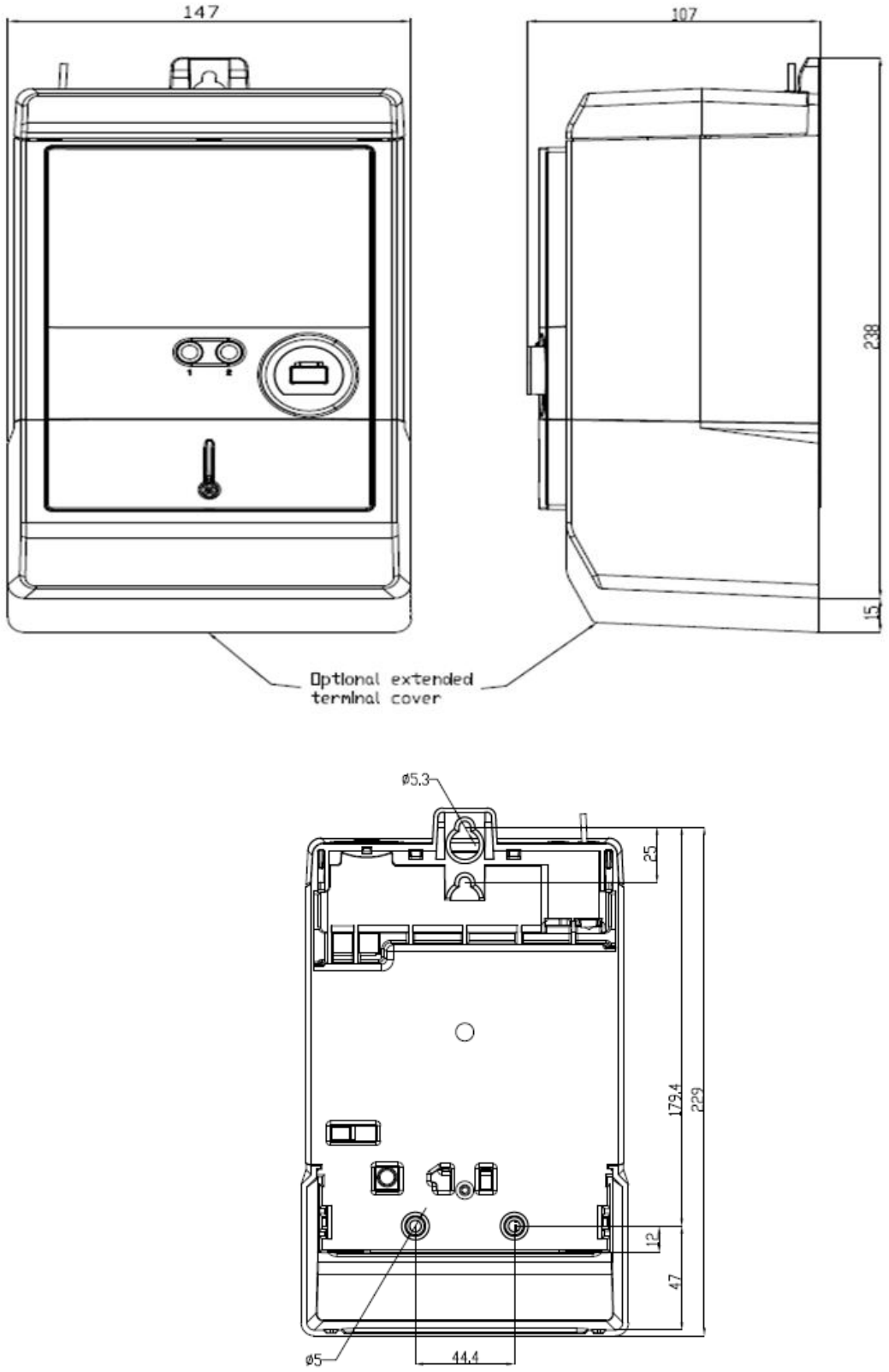

Figure 1.3 Mounting Details for the U1200 Meter

CONFIGURATIONS

The U1200 meter connections are shown in the diagram below.

Configuration U1210

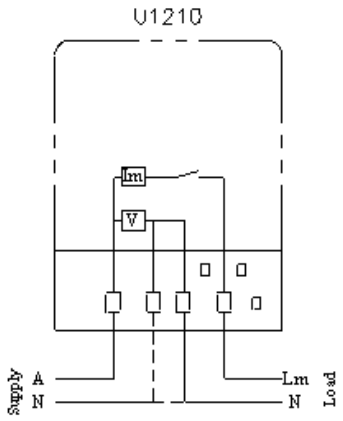

A - Active (100A Max)
N - Neutral
Lm - Element 1 Load (100A Max.)
- – - Single/Double Neutral Wiring

Configuration U1211

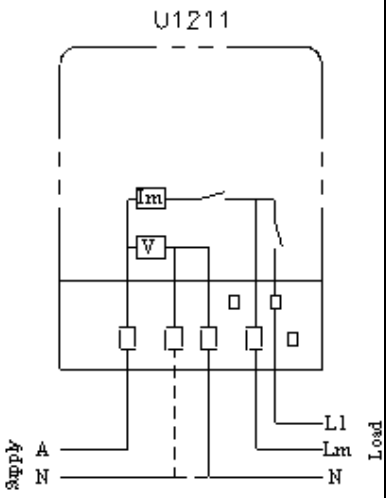

A - Active (100A Max)
N - Neutral
Lm - Element 1 Load (100A Max.)
L1 - Element 1 Controlled Load (40A Max.)
- – - Single/Double Neutral Wiring

Configuration U1215

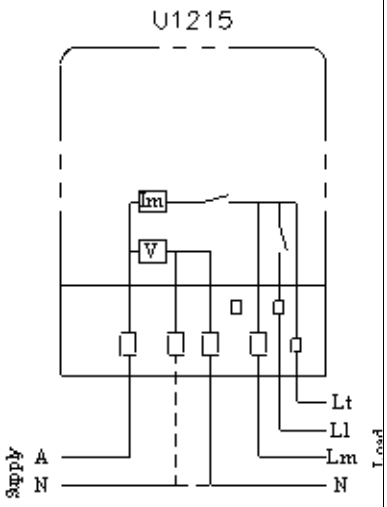

A - Active (100A Max)
N - Neutral
Lm - Element 1 Load (100A Max.)
L1 - Element 1 Controlled Load (40A Max.)
Lt - Element 1 Uncontrolled Load (40 A Max
- – - Single/Double Neutral Wiring

Configuration U1224

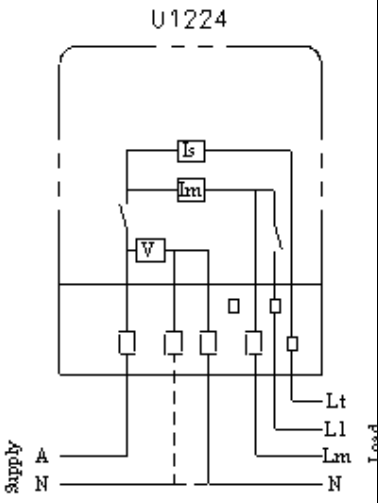

A - Active (100A Max)
N - Neutral
Lm - Element 1 Load (100A Max.)
L1 - Element 1 Controlled Load (40A Max.)
Lt - Element 2 Uncontrolled Load (40A Max
- – - Single/Double Neutral Wiring

Configuration U1225

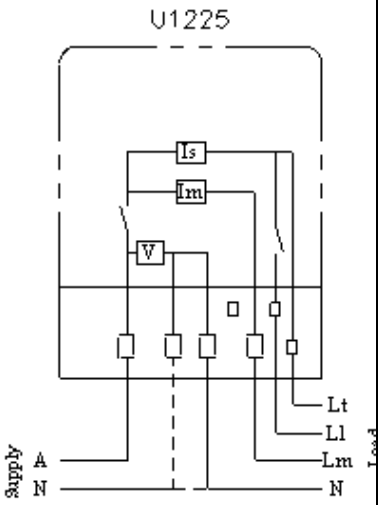

A - Active (100A Max)
N - Neutral
Lm - Element 1 Load (100A Max.)
L1 - Element 2 Controlled Load (40A Max.)
Lt - Element 2 Uncontrolled Load (40 A Max
- – - Single/Double Neutral Wiring

Chapter 2
Basic meter functions

This chapter provides the full details and specifications of the U1200 meter functions. The basic meter functionality includes Calendar clock, Battery, Energy Register, Load profile, Display, Disconnect Relay and event management. It also includes descriptions on the warning and error codes that may appear on the meter display.

Calender Clock

The meter has a dedicated internal crystal to maintain the real time clock (RTC). The clock is used as time stamp for event logging, load profile interval clocking, time-of-use tariffs and load control and leap year occurrence. During an outage the meter always uses this RTC chip for time keeping. If the meter is connected to an AMI communication network. The network will update the meter time via the communication module.

The calendar makes the necessary changes for Leap Year. The meter time and calendar clock complies with AS 62054.21 (2006). Crystal time keeping is within 1s/ day at 23^0C

TIME AND DATE

The time and date of the calendar clock can be set remotely via the communication module or locally via EMPWin+ software. Time and date is stored and handled as standard time. The time is based on crystal and updated periodically from the network.

Only 24-h format is supported for time. Midnight is shown as 00:00. The date is in DD, MM, YY format.

TIME ZONE

The time zone selection gives the ability of selecting the respective geographical time location for where the meter will be installed. This enables the AMI Head-End System to correctly apply time zone offsets if they are collecting data across different time zones.

TIMESTAMP

The metrology data and energy information are logged with the time of occurrence. Time stamps are used when storing information in profiles, event logs.

BATTERY

While the meter is off, the power supply for the real-time clock is backed up by an onboard battery. The battery typically provides 5 year reserve (Meter off supply) and 10 year shelf life (Meter on supply).

Load Profile

The meter supports up to 3 Load Profile groups which each of these groups supporting its own interval lengths of 10,15,30,60 minutes. Each Load Profile group on its own supports up to 4 channels that can be recorded.

The recorded quantity in each of the channels can be selected from any of the quantities as shown in section 4.2 “Measured Quantities” and also RSSI values as shown below.

The maximum recorded days across all sets of Load Profile are determined by the memory size. However, MeterDev allows the user to specify how much Load Profile memory to allocate to each of the 4 possible Load Profile groups. By default the memory is equally shared between the number of defined Load Profile groups. In MeterDev the memory allocated is shown as the approximate number of Load Profile days that will be recorded before wrap around of the Load Profile data occurs. If the default amount of memory is reduced for a particular Load Profile group then that same amount of memory can be allocated to another Load Profile group or groups. There is a minimum memory size that can be allocated to a Load Profile group. All the available Load Profile memory doesn’t need to be used but a warning will be displayed in MeterDev if there is any free space still available.

It is then possible to partially program one or more of the Load Profile groups that are currently running in the meter. Load Profile groups 1 to 4 have a priority where group 1 is the most important. If the memory allocated to each Load Profile group is unchanged then it is possible to change the type of Load Profile data or the number of channels or interval length without disturbing the lower priority Load Profile groups. Partial programming a particular Load Profile group will always clear all of the existing Load Profile data for that Load Profile group. If the memory size is changed in a higher priority Load Profile group then all lower priority Load Profile groups will also be cleared during partial programming of the higher priority group and will be disabled.

The Load Profile quantities can be read locally via the optical port or remotely via the communication module to the AMI Network Management System. All the profiles are organised as a circular buffer. The entries are stored in the same order as they occur, so the most recent entry is stored last. Once the buffer is full, the oldest entry will be overwritten by the most recent one. When reading the profile, the entries are given out the same way, i.e. the oldest entry first.

The recorded quantity in each of the channels can be selected from any of the energy metered quantities as follows:

Table1.2 Load Profile list
kWh Element 1 (Import)
kWh Element 1 (Export)
kWh Import Total
kWh Element 2 (Import)
kWh Element 2 (Export)
kWh Export Total
kVARh Element 1 (Import) (Q1 + Q2)
kVARh Element 1 (Export) (Q3 + Q4)
kVARh Element 2 (Import) (Q1 + Q2)
kVARh Element 2 (Export) (Q3 + Q4)

kVARh Import Total
kVARh Export Total
Voltage
Amps Element 1
Amps Element 2
Frequency
Power Factory Element 1
Power Factory Element 2
Power Factory Total
RSSI

RSSI VALUES PROFILING

If the meter is fitted with a transparent communication module it can profile RSSI value but these values will only be reported if a supported modem type is connected to the meter and the modem support options have been enabled in the meter program.

The RSSI values are read from the modem every 5 minutes.

RSSI Load Profile values can be saved as an Instantaneous value (most recent value from modem) at the end of the current Load Profile interval. A value of 65535 indicates that there is no modem connected or a recent power outage prevented a value from being obtained. If a 65535 occurs then the Load Profile interval will also be marked with a status named ”modem read failure”.

The minimum RSSI, average and maximum values can also be recorded in Load Profile.

Most modems will return an RSSI value of 99 if the modem cannot calculate a valid value. The value of 99 will be used in maximum RSSI Load Profile channels, not used for minimum RSSI (if a lower value had already been obtained) but it will be used in averaging. For this reason average RSSI values that are greater than 31 are an indication of at least some 99’s occurring during that particular Load Profile interval.

Value	*RSSI dBm*
0	-113dBm or less
1	-111dBm
2..30	-109dBm..-51dBm
31	-53dBm or greater
99	not known or not detectable
65535	no modem connected or a recent modem power outage

RESET

It is possible to reset load profile data. If the data structure of the load profile is modified (e.g. the number of energy registers captured or the length of the capture period) the load profile automatically resets to avoid any inconsistent data. At the same time a corresponding event is stored in the event log (which is detailed in the section Event Management).

Registers

The active and reactive energy registers have a resolution of 1 Wh and 1 Varh.

Total energy registers available to record different energy quantities are defined as follows:

Table 1.3 Register list
kWh Element 1 (Import)
kWh Element 1 (Export)
kWh Import Total
kWh Element 2 (Import)
kWh Element 2 (Export)
kWh Export Total
kVARh Element 1 (Import) (Q1,Q2)
kVARh Element 1 (Export) (Q3,Q4)
kVARh Element 2 (Import) (Q1,Q2)
kVARh Element 2 (Export) (Q3,4)
kVARh Import Total
kVARh Export Total

CURRENT BILLING PERIOD

The current billing period is the accumulated energy totals and TOU registers at time of reading the meter.

PREVIOUS BILLING PERIOD

The previous billing period is a snapshot of the accumulated energy totals and TOU registers. The meter stores the last 12 billing periods. These reads are scheduled Weekly, Monthly, or on a particular month of the year via the recurring and non recurring screens in EMPWin+.

SELF READS

The self read is a snapshot of the accumulated energy totals and TOU registers at Midnight each day. The meter stores the last 8 self reads.

INSTANTANEOUS VALUES

The meter measures instantaneous values of the energy that can be displayed on the LCD. The list of the instantaneous values is given below:

- Voltage
- Current
- Frequency
- Power Factor
- Active Power
- Reactive Power

The display sequence of the instantaneous values is also user programmable via EMPWin+.

Quality of Supply Monitoring

The meter records data which is useful for system monitoring or for investigation of local voltage and load problems. The meter can display, voltage, current, frequency, power and power factor on the LCD as part of the cyclic display or read both remotely and locally.

UNDER VOLTAGE & OVER VOLTAGE RECORDING (SAG AND SWELL)

Under voltage and over voltage events can be recorded when the voltage has passed outside programmed threshold limits. Each event will be recorded as a start time & date, end time & date and the worst case value that occurred during this period. The user can program the meter with the high and low threshold levels and the breach time.

Time-of-Use (TOU) Tariffs - The U1200 meter supports 6 Time-of-Use tariff rates: which are user configurable.

Low burden and low starting current

The use of low-power electronics means that the meter has a low power burden (less than 2 watts and 10 volt-amperes) and the starting current is well below the equivalent electromechanical meter at less than 40 milli Amperes.

Event Log

The U1200 meter logs all the events with respect to meter functionality in the order of occurrence so as to keep a record of the meter. The events include the meter's to load control relay, disconnect relay, load profile, power supply, fraudulent events, and any relevant meter error or warning that might occur. These events are stored along with the time-stamp of the time of occurrence.

Fraud Detection and prevention

The fraud detection in the fraud detection in the U1200 meter detects reverse energy, tampering and terminal cover removal. The meter incorporates several security-related features, such as password protection and reverse energy detection. The password levels include, main password allowing full access to the meter and restricted lower level programmable access passwords.

Modular communication

The U1200 is designed to allow field-upgradeable communication to address future communication needs

The U1200's modular design is unique in that it allows the existing communication module to be replaced with a new module without the need to replace the meter.

- When the time comes to replace the communications module this can be done without disconnecting customer supply
- Communication module can be replaced without breaking main terminal cover seal.
- E350 supports the key ANSI (American National Standard for Utility Industry) communication standards.
- ANSI C12.19 - ANSI standard for extracting and organizing meter data in a specific format.
- ANSI C12.18/12.19 - ANSI standards that describe protocols used for two-way communications between meter and module.

These standards have enabled the U1200's interoperability with the SSN (RF), Gridstream RF (RF Mesh) and (4G, WiMAX) modules. New modules can be easily interfaced as your requirements change.

OTHER COMMUNICATIONS

The meter has other communication options serving for both local and remote operations:

- Optical port for local reading using laptop PCs or hand held units.

- Home Area Network (HAN): Refer to Communication module appendix at the back of the manual.

Programmable Display

The Liquid Crystal Display (LCD) of the meter is user-programmable to configure sequencing of the displayable items, number of energy digits required, scrolling options etc. Various annunciators included on the LCD display, provide additional information on the displayed metering quantities. Others annunciators include element indicator, load control, disconnect relay status, LAN/ HAN connectivity, direction of active and reactive energy etc.

Four Quadrant metering

Energy imported by customer = Energy delivered by supply authority
Energy exported by customer = Energy received by supply authority

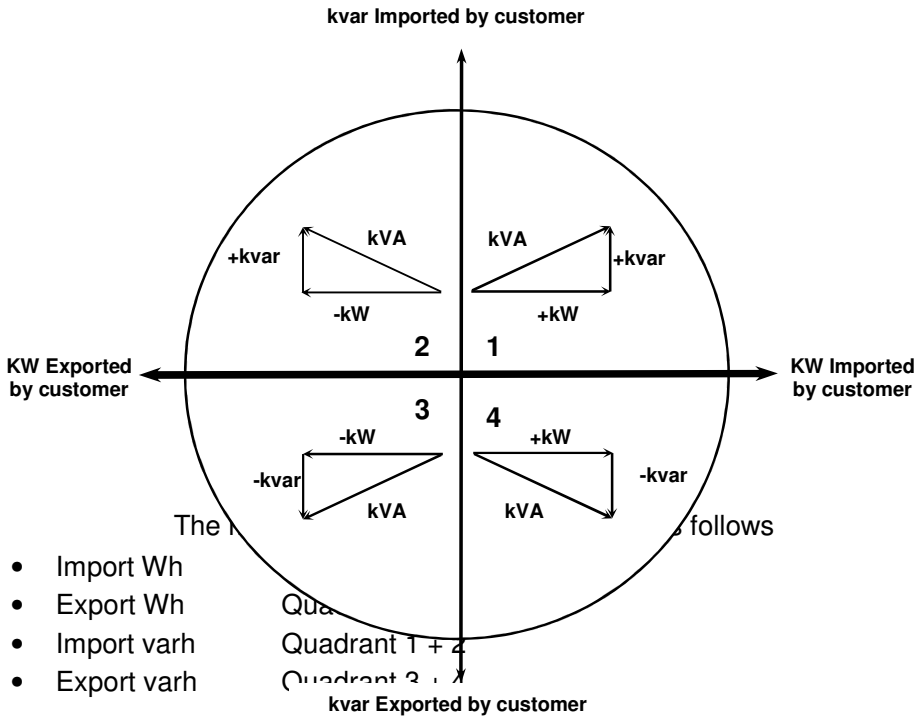

The follows

- Import Wh
- Export Wh Qua
- Import varh Quadrant 1 + 4
- Export varh Quadrant 3 + 4

*Figure **Error! Reference source not found.**.1 Four-quadrant geometric representation of active power (kW) apparent power (kVA) and reactive power (kvar)*

Chapter 3
AMI Meter Operation

This chapter provides the full details and specifications of the U1200 meter controls. The basic meter functionality includes calendar clock, Battery, Energy Register, Load profile, Display, Disconnect Relay and event management. It also includes description on the warning and error codes that may appear on the meter display.

U1200 meter

The U1200 meter can be used as a standard type 4, 5 & 6 meter with class 1.0 accuracy. The meter configuration is programmable allowing to be customised to meet the user's requirements.

The Smart meter functionality detailed in this chapter are load control management, Time of use, event notification, outage notification, supply capacity control and Disconnect Relay and other basic metering functionality. The LCD display on the meter allows user programmable display items and also provides additional information in the display settings, this is detailed in Chapter 4.

Meter Memory

The entire metrology data is recorded in a durable, non-volatile memory (FLASH). All the energy registers are stored in this memory.

Time-of-Use

Time-Of-Use (TOU) Tariffs can be programmed in the U1200 meter.

- There are six tariff rates at which kilowatt-hour consumption can be metered.
- They are defined according to day type for a table comprising of up to 30 programmable switch times
- Switching times can be specified in 15 minute intervals.

Load Control Relay

The integrated 40A load control relay is available as an option for the U1200 meter.

LOAD CONTROL GROUPS

Load control groups enable a variable number of meters to have their load control schedules overridden. The internal load control relay can be programmed either remotely or locally to respond to one primary group, one secondary group and one tertiary group. The commands will override or disable the internal load control command.

BOOST

The Boost function will energise the controlled load for a preset time, which is remotely or locally configured from 1 to 6 hours in half hour increments. This functionality can be enabled or disabled both locally or remotely.

LOAD CONTROL STATUS

The LCD display shows a status LC1 to indicate the load control relay has closed.

Disconnect Breaker

U1200 meter features an integrated Disconnect Breaker to connect or disconnect the power supply to the consumer under specific conditions. Max switching current of up to 100A at nominal line voltage and a maximum 10,000 cycles.

The Disconnect Breaker operations are categorised as below

- Arm Operation - Customer presses button to reconnect or disconnect.
- Local operation - reconnect or disconnect.
- Remote operation - reconnect or disconnect.

Arming

Arm Operation mode is set by the network remotely or locally via the optical port to reconnect the disconnect relay. When the meter is receives a reconnect command in this mode, the householder is required to press the push button “2” located on the meter for 3 seconds to reconnect the disconnected breaker.

Local

The Disconnect Breaker can be controlled locally via optical port.

Remote

The Disconnect Breaker can be controlled remotely via the communication network.

AUTO-DISCONNECT

The auto-disconnect functionality of the breaker is activated as a conditional sequence of an external reconnection command. This function requires a remote Breaker reconnect to start the Watts import load versus limit checking.

If the Watts specified in the program exceed the limit for the length of the programmed Breach period (during the monitoring period) then the Breaker will disconnect, otherwise the Breaker will remain Connected and the process will terminate at the end of the monitoring period.

If a power outage occurs during the monitoring period and the Breaker is still connected then on power restore the process will start again as if the reconnect command was just received.

If the Breaker is disconnected due to the Auto-disconnect trigger and then an outage occurs the Breaker will remain disconnected when the power is restored and a new external reconnect command will need to be sent to restart the process.

The Auto-disconnect process when initiated, takes precedence over the Supply Capacity Control processes defined below.

SUPPLY CAPACITY CONTROL

The meter has the two supply capacity limit settings

a. Normal supply capacity limit and

b. Emergency supply capacity limit.

These control settings are configured remotely or locally.

The normal or emergency supply capacity limit is configured to disconnect the Breaker and remain disconnected for the specified duration, where the load level exceeds the specified supply capacity limit over a specified period of time. The meter will log an event for all changes to the supply capacity settings and statuses.

BREAKER STATUS

All Breaker operation are logged in to Event log which are listed in the Appendix B

The current state of the Breaker is displayed as either connected or disconnected on the LCD of the meter.

Quality-of-Supply Monitoring

The U1200 meter records data which is useful for system monitoring or for investigation of local voltage and load problems. The meter can display, voltage, current, frequency and power on the LCD as part of the cyclic display or read both remotely and locally.

OVERVIEW

The U1200 meter provides following features to monitor power quality:

- Voltage and current registers
- Power fail counters
- Under and over voltage events (Sag and Swell)
- Power factor register.

UNDER VOLTAGE & OVER VOLTAGE RECORDING (SAG AND SWELL)

Under Voltage and Over Voltage events can be recorded when the Voltage has passed outside programmed threshold limits. Each event will be recorded as a Start time & date, End time & date and the worst case value that occurred during this period. The user can program the meter with the High and Low Threshold levels and the minimum time (Breach Time) in seconds for the Event to last before recording it.

HIGH THRESHOLD

High Threshold values can be entered for Event recording to be triggered for excessively high voltage values. Typically this might be set to 255. If 0 is entered then the High limit will not be checked. Always set to 0 when not in use to avoid unnecessary data overwrites

Values *0 to 300*

LOW THRESHOLD

Low Threshold values can be entered for Event recording to be triggered for excessively low voltage values. Typically this might be set to 220. If 0 is entered then the low limit will not be checked. Always set to 0 when not in use to avoid unnecessary data overwrites.

Values 0 to 300

MINIMUM DURATION (BREACH TIME)

This value represents the minimum time in seconds that the Quantity will be outside of the specified limits before it is recorded as an event. The time limit is in seconds from 1 to 255 (4.25 minutes).Typically this might be set to several seconds to avoid picking up surges.

Values 1 to 255 seconds

MAX EVENT RECORDING PER DAY

Max Event Recording lets the user limit the number of Under and Over voltage events stored in a particular day. Typically this might be set to less that 200 to avoid over flowing the total event log of 500.

Values 0 to 300 Events

POWER OUTAGE

A total power failure is detected directly from the power supply of the meter and works independently of the voltage measurement.

After a Power failure, the internal power supply voltage starts decreasing. As soon as the power-down threshold is reached, all functions of the device are disabled and the power down procedure is initiated. The device operates until the power down threshold is reached.

The threshold is a parameter that is determined by the hardware and is related to the operating voltage requirement and therefore not programmable.

OUTAGE DETECTION

When a meter reaches a power down threshold limit, it triggers the power down procedure and notifies the upstream system of the supply failure upon detection.

POWER OUTAGE EVENT

Power ups and power downs trigger a power up/down event pair which gets logged together with the timestamp in the event log.

COMMUNICATION INTERFACE INTERRUPT

When a Power outage Event is recorded, the communication interface interrupt is signalled so that a communication module may take action to support a last gasp message to the Head End System.

Fraud Prevention and Detection

The meter records full or partial program changes, power outages and detects meter reverse energy flow (detailed below) to indicate the possibility of fraud.

U1200 meter support the following fraud detection features:

- Reverse energy detection.
- Detection of terminal cover removal
- All tampering events will be stored in the event log
- Password Protection for meter program and local communication

REVERSE ENERGY DETECTION

The meter can log Reverse Energy flow as an event and can issue a notification (alarm).

Reverse Energy Flow will need to be disabled for Co-generation applications.

The meter incorporates following features for detection and metering of reverse energy flow:

- The reverse energy (export) for reporting can be enabled or disabled in the meter's program. Also, the point at which this energy is reported can be programmed anywhere between 1 and 255 Watt - hours.
- Once export energy has been detected (if detection is enabled) the meter will add the warning message to the event log and display list (after the last programmed entry). This display is retained whenever the export energy continues to flow and until the status of the meter is reset.

In addition a warning message is reported by the meter when a program read is made. This warning flag is retained in the meter and can only be reset by the EMPWin+ 'Reset Status' command or NMS software. Reverse (export) energy is accumulated in separate registers and is recorded with the same accuracy as forward (import) energy.

Note: The meter's red LEDs do not flash for reverse energy consumption.

PASSWORD PROTECTION

Correct passwords are required to access the meter via the optical port and communication module. Three consecutive incorrect attempts will lockout the user for one hour for that particular password level. The password is encrypted for additional password protection during communication.

The access levels are:

- Full read/write access.
- Two programmable intermediate levels with restricted read/write access.

Note: Passwords are defined by running a separate security program – EMSecure, part of the EMPWin+ suite of programs.

Chapter 4
Gross and Nett Metering

Available in the next revision of the manual.

Chapter 5
Meter Communication

Overview

The meter features three communication interfaces:

- LAN Last Mile Communications (Modular based communication)
- HAN (Modular based communication)
- Local - Optical Port

The U1200 meter can interface with different LAN/HAN communication modules such as the L+G Gridstream RF mesh / ZigBee, Silver Springs Networks RF mesh / ZigBee , WiMAX / ZigBee and 3G. The meter has been designed with the aim to physically separate the meter and LAN/HAN communication components.

The major functionality such as load profiling, Time-of-Use, other metering data and events are remotely accessible via the communication module. These values/information can also be locally read via the optical port using the Laptop or Hand Held Units, for the purpose of configuring, troubleshooting or when the endpoint itself is unavailable via LAN communications.

WAN/LAN Communication

The meter's hardware has been designed to interface to compatible LAN communication module. Different LAN communication modules that are currently available to be flexibly interface with the U1200 meter are

- Landis+Gyr Gridstream 3G communication with Zigbee
- Landis+Gyr Gridstream RF communication
- Landis+Gyr WiMAX module with ZigBee
- Silver Springs network NIC

TRANSPARENT COMMUNICATION

It is also possible to use the meter in an AMR application where a transparent modem is connected to the meter. The remote port supports the Landis+Gyr Kingfisher 2 protocol which is the same as the optical port. There are a few Head End Systems which support this protocol including Landis+Gyr EMPWin+, Landis+Gyr Advance Economic and Itron MV90.

Local Communication

ANSI OPTICAL PORT

For onsite communications the meter uses an ANSI standard Type 2 optical port, which complies with AS1284.10.2 -1993. The ANSI standard port provides a fast and easy method of reading and programming the meter. High speed communication at the rate of up to 38400 baud is available through the optical probe.

The standard probe recommended is the Landis+Gyr AIP200 probe as detailed below.

Optical Port

To communicate through the optical port, a personal computer or a suitable hand-held device and an ANSI standard optical probe is required, together with a meter programming and/or reading

software. A typical example is **EMPWin+ (Version 1.0.31)** (the software support program for the U1200 meter) which is available from Landis+Gyr.

AIP200 Optical Probe

The AIP200 probe is a dual standard probe useable for both ANSI and IEC1107 (Flag) standard ports. It is magnetically held to the port and locks into position for the ANSI type port. The U1200 meter is fitted with this ANSI standard port.

Figure 2.1 AIP200 Probe

To set up the communication link, place the optical probe against the optical port, as shown in the Figure 2.2 below. The D shape of the ANSI standard port assists to correctly align the probe to the port. When the magnet of the probe ‘clicks’ into contact with the steel face of the optical port (a corresponding D-shaped depression in the surface ensures that this only occurs for the correct alignment), the magnet then holds the probe in place. Once the connection is made the EMPWin+ software can handle the reading or programming of the meter.

EMPWIN+

The U1200 meter is configured with EMPWin+, a Windows based software package. The Landis+Gyr Part number for this software is **CD-EMPWin+.** This suite of programs covers all of Landis+Gyr's AMI meters.

EMPWin+ is a software support application developed by Landis+Gyr, Australia used to:

- **Program the meter** - EMPWin+ is used to write the user selected and programmable characteristics of the meter.
- **Read the meter** - This allows reading the meter through its optical port using a computer or hand-held unit. Also, the basic meter is fitted with a communication port for remote communication.
- **Data reporting** - The detailed reporting of the meter's functioning and non-billing data can be used for system monitoring of supply quality, for security checks and for fraud investigation.

Figure 2.2 AIP200 Probe connected to the optical port

EMPWin+ is a Windows program running under Windows NT, Windows 2000 and XP / Vista on IBM compatible personal computers or laptop. Details on how the meter configurable parameter can be set and be altered, is explained in chapter 6, "Programming U1200 meters".

For full details about EMPWin+, please refer to the EMPWin+ User Manual which is supplied with the EMPWin+ software.

Chapter 6
Programming U1200 Meters

AMI meters have multiple functions allowing the meter to be utilised for a large number of applications. During manufacture of the U1200 meter, the meter must be programmed (configured) with the utility/ Customer configured program. This configures metering information and other operating parameters to be displayed, load control, load profile, time-of-use setup (if required), Disconnect Breaker functionality and security arrangements (access passwords etc.). This configuration procedure and programming details are explained in this chapter.

The actual programming of the meter is performed using L+G's commissioning and programming tool called EMPWin+. The EMPWin+ User Manual gives the full details of all the functions available in the software package. For those who wish to develop programs themselves, this chapter and the on-screen help available in EMPWin+, will provide all the necessary details.

In general, the U1200 meter is supplied from the factory as pre-programmed to customer requirements, so a detailed knowledge of meter programming is not necessary. Landis+Gyr local offices can provide assistance for most programming matters.

The EMPWin+ software versions 1.0.31 or higher supports U1200 electronic meter. The various modules that make up the full EMPWin+ software package are listed below.

MeterComm (Communications) - All communications to the meters, is carried out from this program. It forms the hub of the EMPWin+ software package.

MeterDev (Program Developer) - Meter program development tool, can operate as a standalone program for the creation of new or the editing of existing meter programs.

MeterView (Billing Reporter) - Program to view the load profile data, billing information and meter program data read produced by MeterComm. For the Exported energy, only the load profile data is available to view.

EMSecure (Security)- Meter access security system development program for controlling access to the meter.

The security systems available through EMPWin+ are detailed at the end of this chapter and in the EMPWin+ User Manual.

The general procedure for programming with EMPWin+ is as follows:

MeterDev - Program Developer

- The basic characteristics of the meter are specified which will determine how the meter is to function. This occupies the majority of the screens in the EMPWin+ Program Developer.
- The programmer then needs to specify the display options to appear on the meter display. For the U1200 meter this is very simple with a maximum of 40 displayable items.
- When the programmer is satisfied with the choices made, the EMPWin+ Program Developer will generate a *program file* (*.mcd).

MeterComm - Communication

- The Communications program allows the user to **Write** this program to the meter. To open the Communications program a User name / Password combination is required.
- Once into the Communications program, the meter-specific information, such as the meter serial number and the customer's account ID must be entered. EMPWin+ then combines this information with the standard meter program to generate a *meter-specific configuration file* (or meter program file).
- Download (**Write**) the meter-specific configuration file to the meter using the optical port.
- For more detailed information about programming meters and using EMPWin+, refer to the *EMPWin+ User Manual*.

Meter-specific parameters

The 2 parameters described below are generally different for each individual meter. They are therefore not set up as part of the stored meter program but are entered at the time the meter program is downloaded (part of the Write/Full Program screen entries). They do not appear in the EMPWin+ Program Developer screens (see EMPWin+ User Manual – section on Write a Program to a Meter).

Serial Number

Description: The serial number of the meter. (The meter also has a manufacturing serial number, which cannot be changed.)

Values: Up to 20 alphanumeric characters.

Account ID

Description: The customer's account ID or other location identifier.

Values: Up to 20 alphanumeric characters.

Time setting

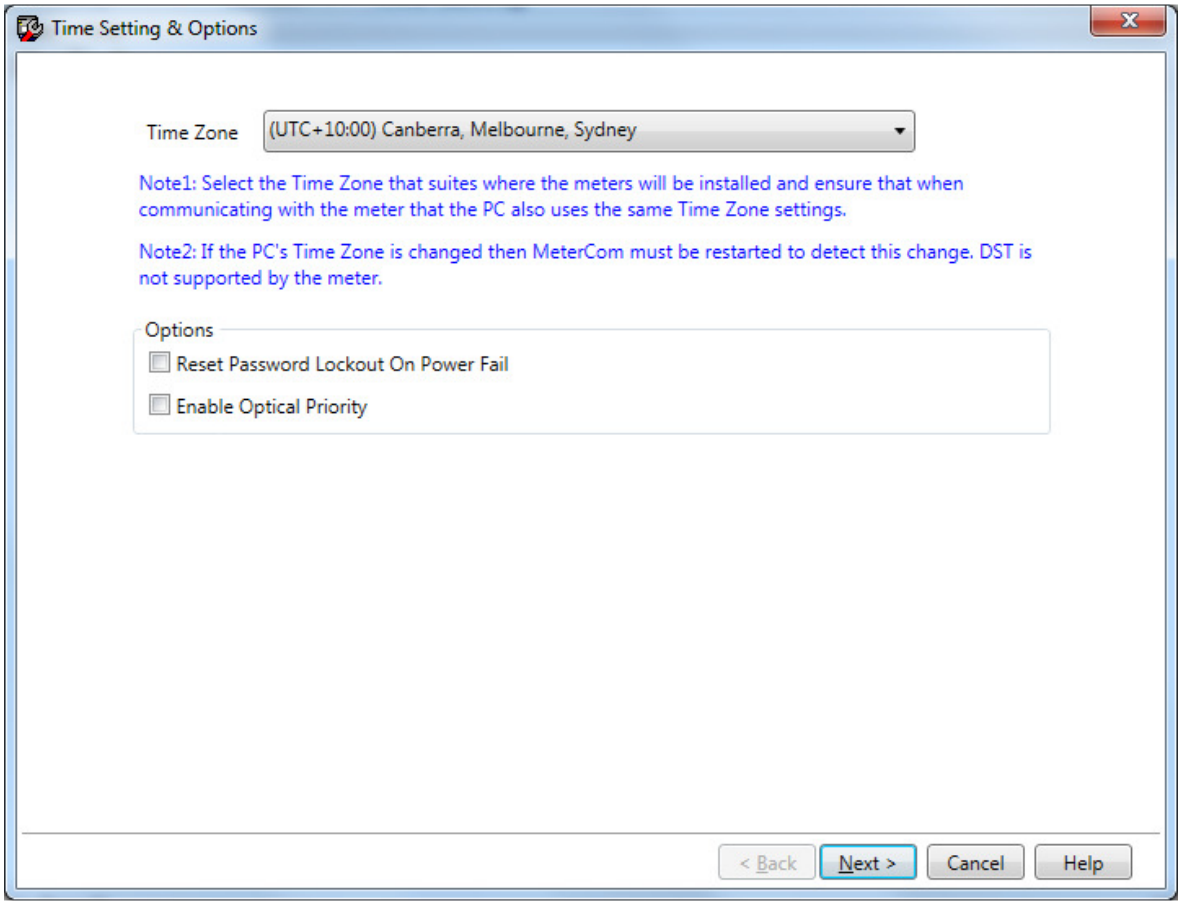

Figure 3.1 Screen1 – Time setting

As noted in the Figure 3.1, the time zone selection is for the purpose of selecting the respective geographical time location for where the meter will be installed. This enables the collection software to apply time zone offsets if they are collecting data across different time zones.

TIME ZONE

The drop down list is pulled down to select the appropriate time zone with respect to meter site of installation.

Default selection: (GMT+10.00) Canberra, Melbourne, Sydney.

RESET PASSWORD LOCKOUT ON POWER FAIL

The meter can be programmed to reset the lockout by power cycling the meter. See also section **Error! Reference source not found.** "

ENABLE OPTICAL PRIORITY

It gives priority to the optical port in case a remote access to the meter happens concurrently. It also kicks off the remote port at "safe" points in the remote communication cycle when a local communication is establishing. Otherwise the local communication port is locked out until the remote session is finished.

Remote Communication

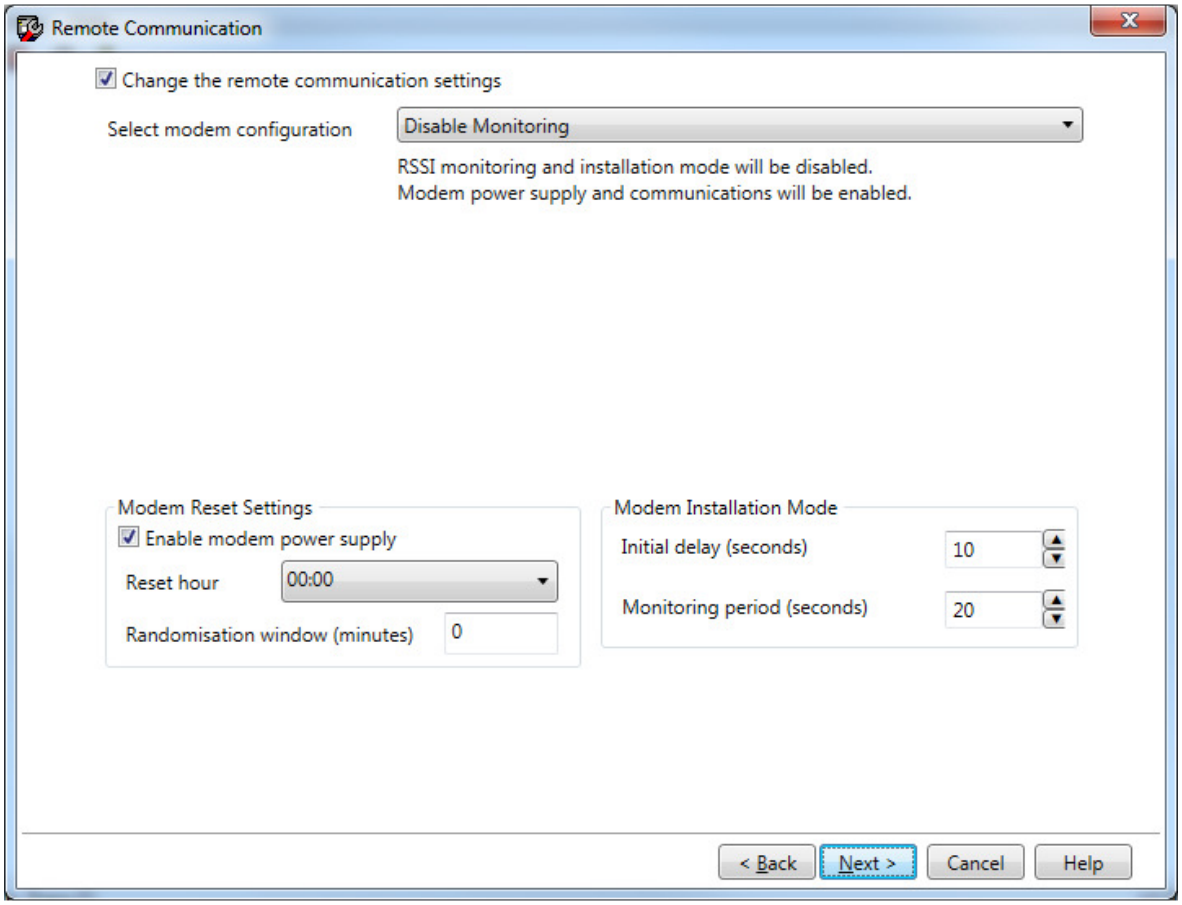

This configuration is available for all U series meters that have fw version R4.0 or later fw version and is used to define the behaviour of a transparent modem (thereafter only the modem).

Communication Modules which do not have their own operating system are not considered to be a modem this includes the Landis+Gyr Gridstream RF and the SSN NIC's.

Do not enable this feature when the meter is used with a communication module which has its own operating system. By doing so the specific communication module settings in the meter will be erased and the module will no longer be able to communicate to the meter.

CONFIGURE METER TO USE MODEM COMMUNICATION SETTINGS

If the meter doesn't have a modem then the option should not be selected

If the modem option is enabled then additional RSSI display and Load Profile monitoring options can be used.

SELECT MODEM CONFIGURATION

There are currently three modem types that have been tested and although the default settings is the same for each meter type they have been setup as separate types just in case timing parameters need to be changed in the future. The main modem feature that is currently available is for the support of RSSI values that can be returned by the modem.

MODEM RESET SETTINGS

This option is to enable the meter's port to power the modem or not and to specify a time of day when the modem's power supply can be optionally reset for 30 seconds, there is also a random number of minutes after the specified hour so that multiple modems don't all power cycle at the same time.

MODEM INSTALLATION MODE

The modem Installation mode settings have been made user configurable so that this feature can match the meter/modem installer's normal operating practises.

SIGNAL STRENGTH DETECTION AT TIME OF INSTALLATION

The meter is capable to display RSSI values in one of the Alternate Displays. The intention is to allow the meter/modem installer to check the signal strength at a new location. The four available RSSI values are Instantaneous, minimum, maximum and average. These last three choices are re-calculated after the first RSSI value has been reached in the Alternate display list. The monitoring period for these calculations is determined in MeterDev by the Modem Installation Mode settings that offer from 20 to 240 seconds of monitoring. RSSI reads are attempted about every 4 seconds during the monitoring period. There is also an initial delay before the monitoring period starts; this is to allow for a meter box lid to be closed. It should be noted that the RSSI values that are read for Load Profile purposes are only read every 5 minutes and not every 4 seconds as they are in installation mode.

Modem Installation Mode display of RSSI values has four different stages. When the Alt button is pressed and the first available modem display item is shown it will be presented as C ----- (C followed by a space and 5 dashes). This will stay for the Initial Delay seconds (default is 10). The display will then change to C------ (C followed by 6 dashes) during the first part of the Monitoring period (user configurable in seconds). If during the Monitoring period the modem returns an RSSI value then the last five dashes will be replaced by the RSSI value padded with leading zeros e.g. C-00021. The first – after the C will remain until the Monitoring period expires at that time the last obtained RSSI value will be displayed (without the first dash) for up to 255 seconds or until the Alt button is pressed. If no RSSI value is obtained then the final displayed value will be C -----.

The four different RSSI values Instantaneous, minimum, maximum and average are all displayed as explained above but will have the users display id to distinguish them.

TOU Energy Registers

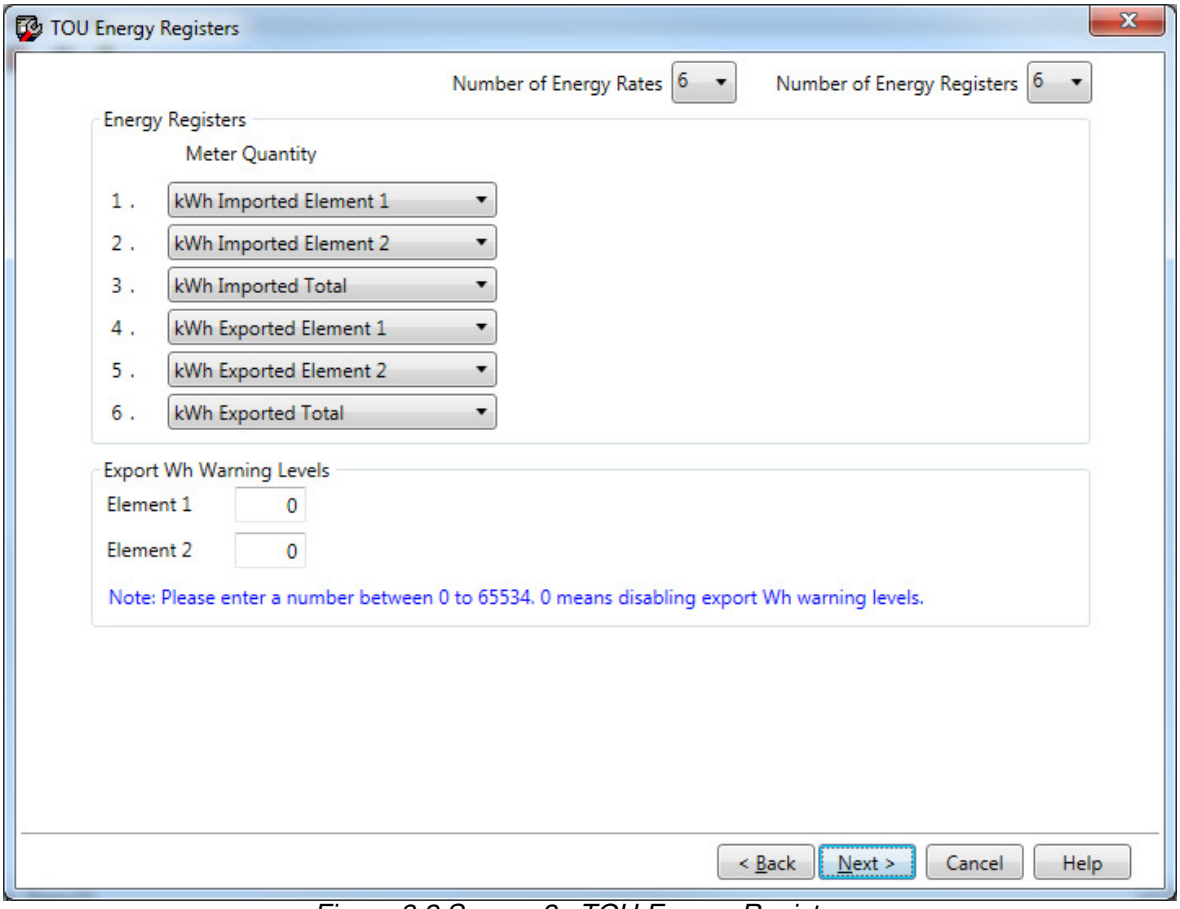

Figure 3.2 Screen 2 –TOU Energy Registers

Meter Quantity

Description This section of the screen allows for the selection of Six TOU Metering Quantities listed in the pull down window initiated by clicking the down arrowhead on the right hand side of each box. Alternatively pressing the keyboard letter 'k' can also be used to display the next available choice in the list.

Export Wh Warning Levels

Description The level at which this warning is activated is programmable.

Values 0 to 65534 (a value of 0 will disable the Export Warning.)

TOU Switch Table

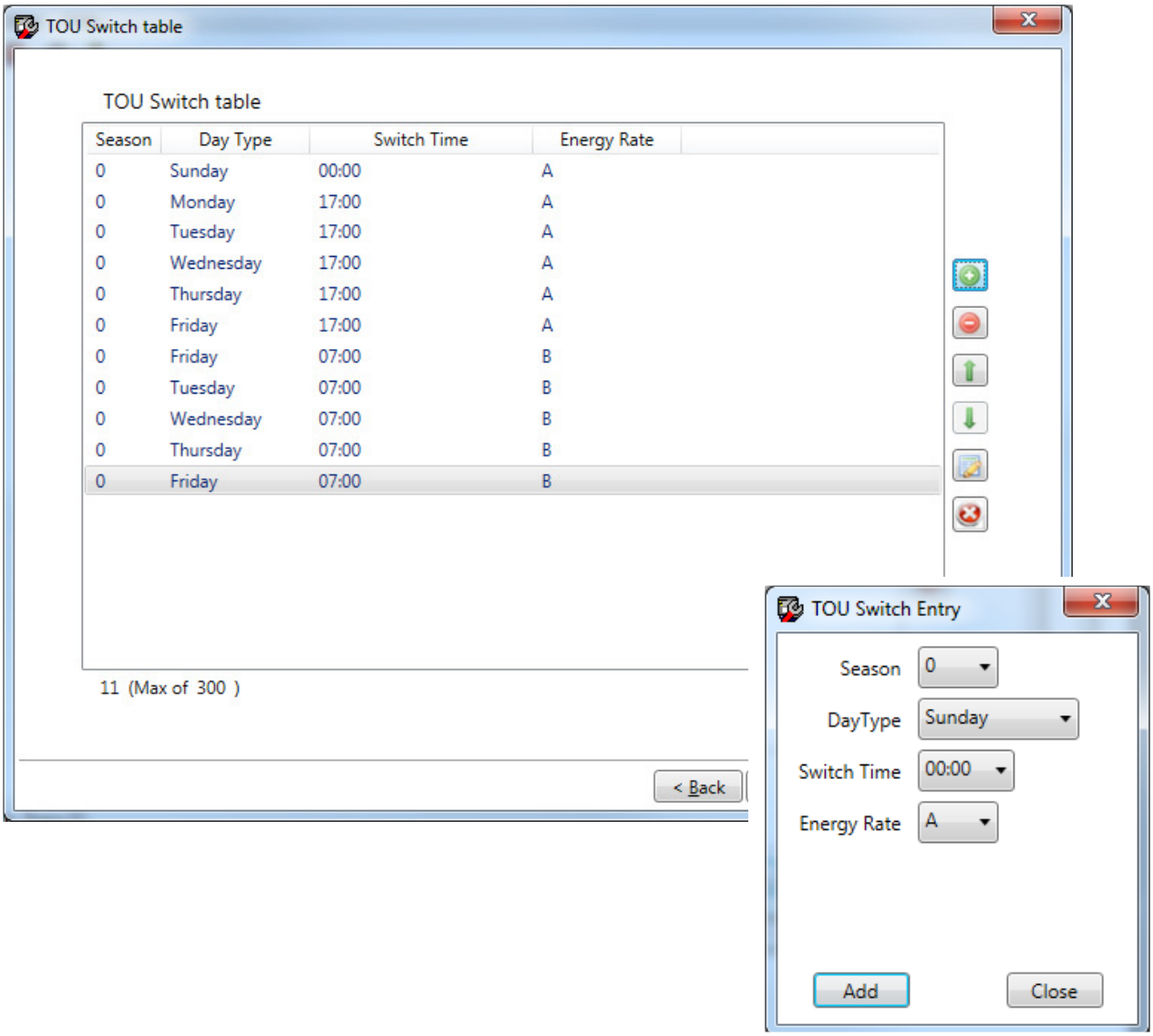

Figure 3.3 Screen 3 TOU Switch Table

Rate Switch Points

Description Rate switch table allow for the specification of the times at which rates are switched. There are six independent tariff rates at which energy consumption can be metered. Rate Switch Points are the times at which the tariff rates change for each combination of day type and season type.

Rate switching is controlled according to the combination of day and season type - there are thirteen day types and up to six season types (0 = same season all year).

Switching times can be specified in fifteen-minute intervals.

A maximum number 300 entries are available.

Values The Table 5.1 details the allowable values in the Rate Switch Points Table.

Table 5.1 Rate Switch Point Table Values

Season	0, 1, 2, 3, 4, 5
Day Type	All Weekday, All Weekend,Saturday, Sunday, Monday, Tuesday, Wednesday, Thursday, Friday, Special 0, Special 1, Special 2, Special 3.
Switch Time	0:00 to 23:45 in 15 minute increments
Energy Rate	A, B, C, D, E, F

Note: The meter will stay in the current rate unless specifically changed. There is no default state for midnight. Therefore, it is important to specify an appropriate rate and relay status at midnight (00:00) for each day type to ensure that the meter will start up in the correct rate.

DATES RELATED PARAMETERS

The meter can be configured to perform certain TOU-related operations on specified dates. There are two types of date:

Recurring Dates (Cyclic) – These are dates that occur regularly each year. The meter performs the specified operation every year on the specified date (up to 300 entries can be listed).

Non Recurring Dates (Irregular) – These are dates that do not occur regularly (for example, Good Friday). Each irregular date must be separately specified for each year (up to 300 entries can be listed).

TOU Recurring Dates

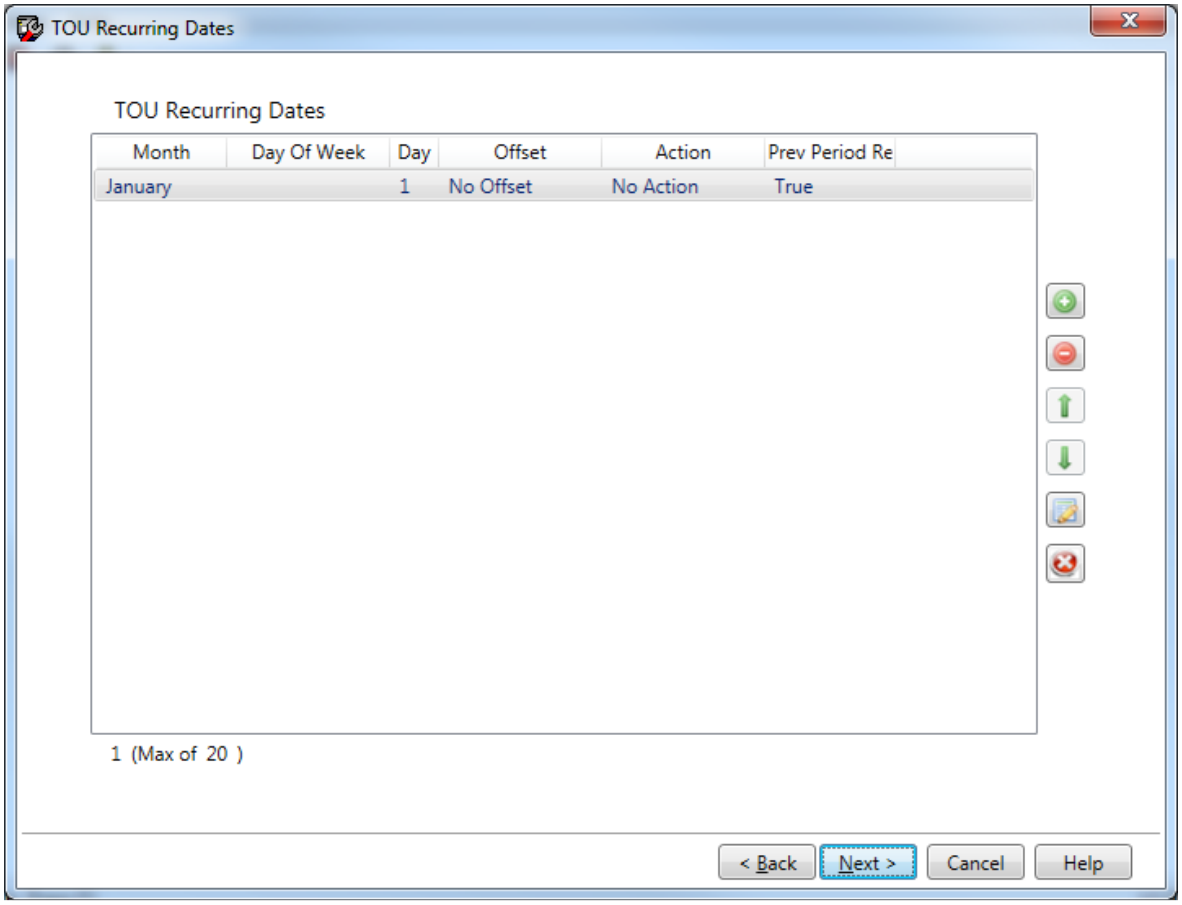

Figure 3.4 Screen 4 TOU Recurring Dates

Recurring Dates (Cyclic)

Description The selections in this table specify the Action, the offset, the day and if a self read is required.

Values The Table 5.2 below details the allowable values in the Recurring Dates list.

Table 5.2. Recurring Dates List Values

Day and Month	Day (1 -31) and Month
Offset	Refer to Figure ABC below
Action	Season change 0 to 3, Special day 0 to 3
Self Read	True or False

Recurring Dates (configuration)

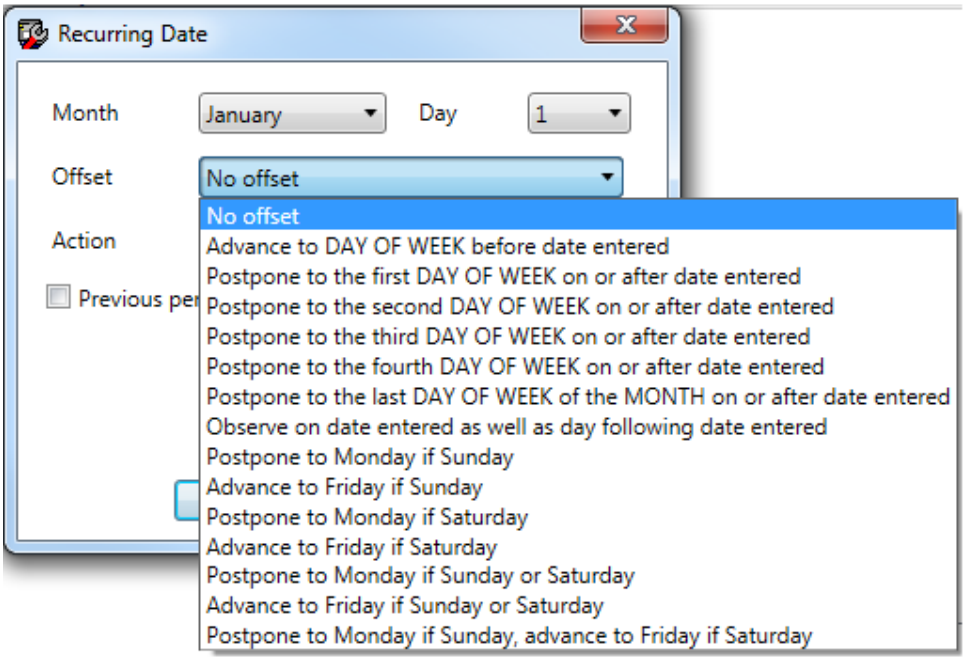

Figure 5.3 Recurring Dates Definitions

Self Read

Description Saves a snapshot of all current billing registers as a previous billing read.

Non Recurring Dates

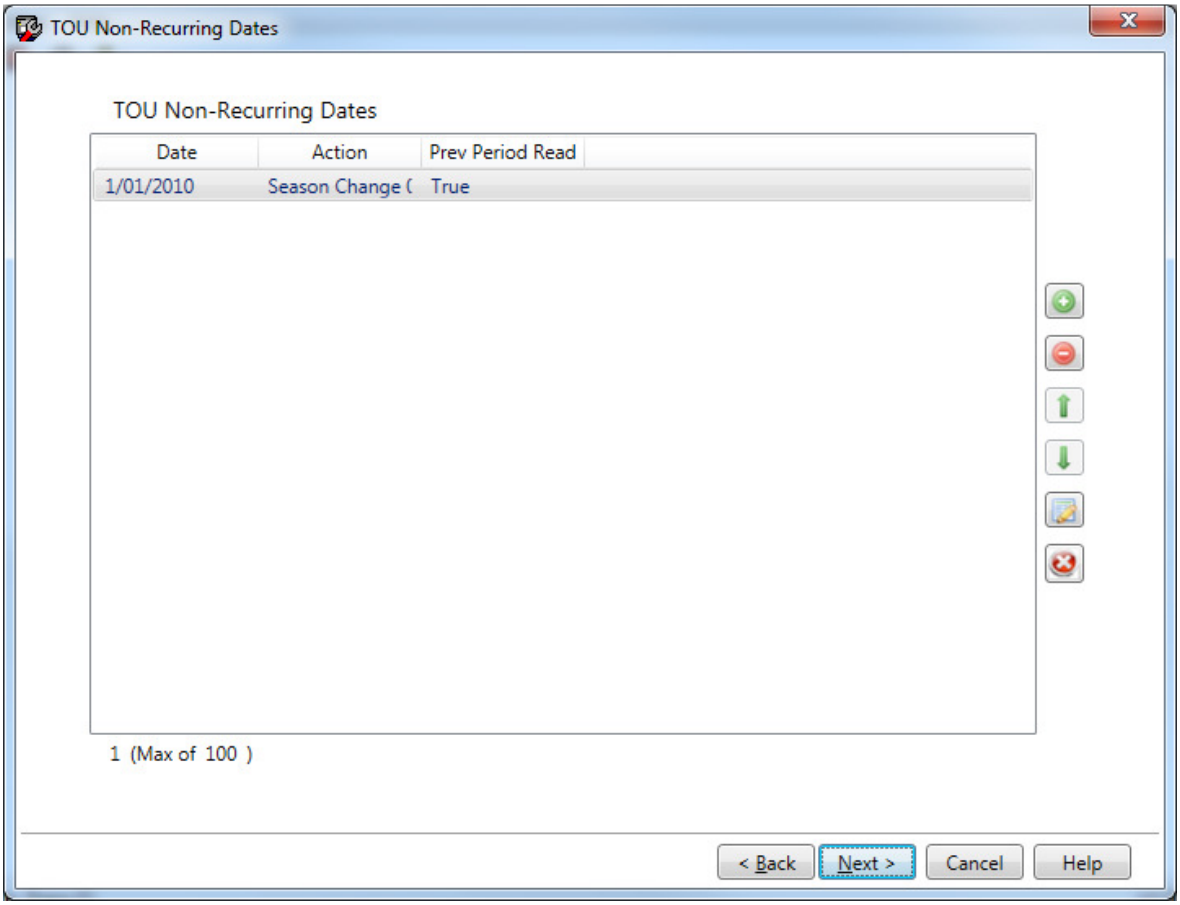

Figure 5.4 Non Recurring Dates Definitions

Non Recurring Dates (Irregular)

Description The selections in this table specify the actual date and day type that the meter utilises on a non-cyclic date. Note that irregular dates such as Good Friday, Easter Monday should be listed here.

Values The values are the same as for cyclic dates except that the Year must be entered with the dates entered.

Load Profile Group Settings

Load Profile groups 1 to 3 (3 Groups supported from FW R4.8) have a priority where group 1 is the most important. If the memory allocated to each Load Profile group is unchanged then it is possible to change the type of Load Profile data or the number of channels or interval length without disturbing the higher priority Load Profile groups.

Partial programming a particular Load Profile group will always clear all of the existing Load Profile data for that Load Profile group. If the memory size is changed in a higher priority Load Profile group then all lower priority Load Profile groups will also be cleared during partial programming of the higher priority group.

It is necessary to configure LP groups sequentially and no group should be skipped especially when partial programming the meter.

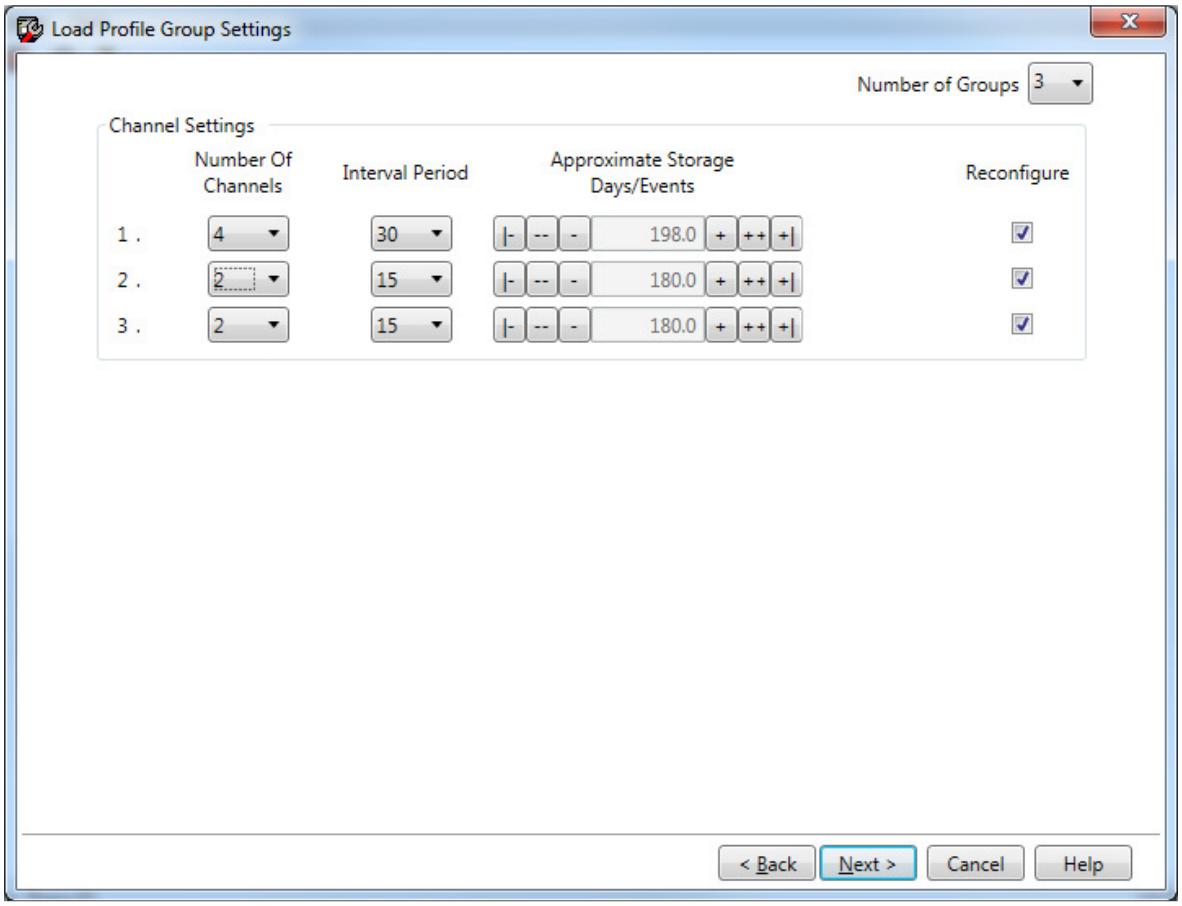

Load Profile Recording

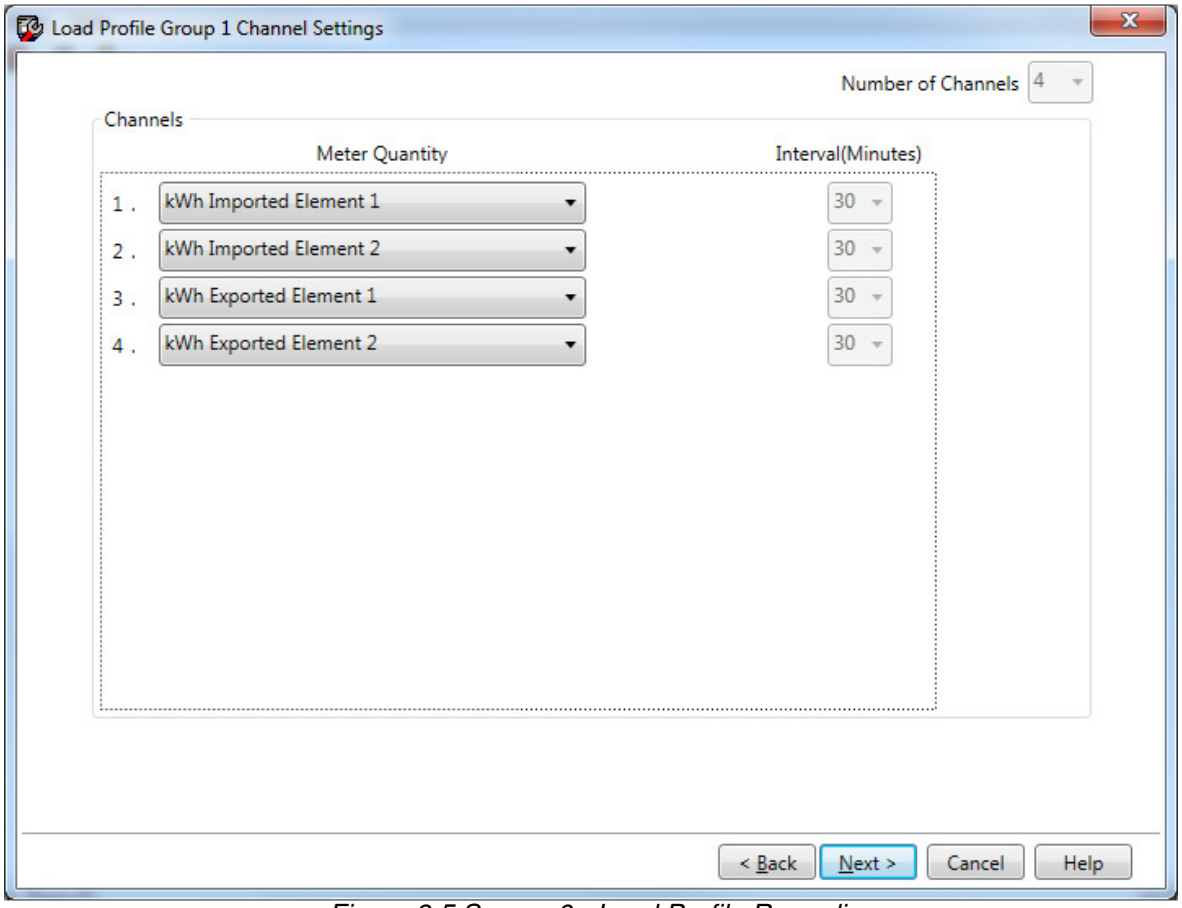

Figure 3.5 Screen 6 - Load Profile Recording

METERING QUANTITIES

The U1200 meter has load profile (LP) as a standard feature and provides ample memory for a wide range of tariffs and applications.

Up to 4 channels of load profile can be recorded by the U1200 meter. The load profile channels are set to interval lengths of 30 minutes and a maximum of 2152 days can be stored across all channels and groups.

METER QUANTITIES

Description Each channel can record one quantity selected from the pull down list (duplication is permitted if required). A detailed list is shown in the Load Profile meter functions section.

Quality of Supply

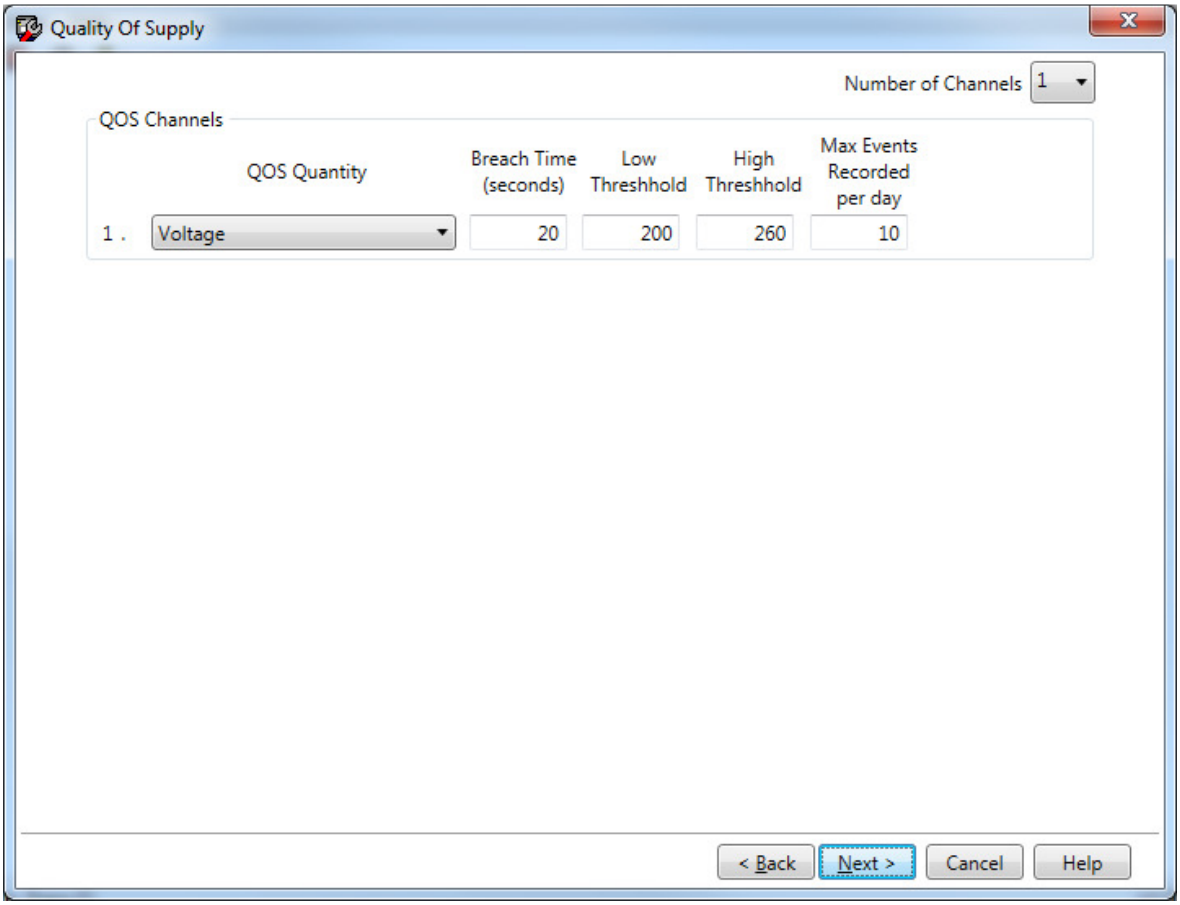

Figure 5.6 Quality of Supply

VOLTAGE SAG AND SWELL RECORDING

HIGH THRESHOLD

High Threshold values can be entered for Event recording to be triggered for excessively high voltage values. Typically this might be set to 255. If 0 is entered then the High limit will not be checked. Always set to 0 when not in use to avoid unnecessary data overwrites

Values *0 to 300*

LOW THRESHOLD

Low Threshold values can be entered for Event recording to be triggered for excessively low voltage values. Typically this might be set to 220. If 0 is entered then the low limit will not be checked. Always set to 0 when not in use to avoid unnecessary data overwrites.

Values 0 to 300

MINIMUM DURATION (BREACH TIME)

This value represents the minimum time in seconds that the Quantity will be outside of the specified limits before it is recorded as an event. The time limit is in seconds from 1 to 255 (4.25 minutes).Typically this might be set to several seconds to avoid picking up surges.

Values 1 to 255 seconds

MAX EVENT RECORDING PER DAY

Max Event Reording lets the user limit the number of Under and Over voltage events stored in a particular day. Typically this might be set to less that 200 to avoid over flowing the total event log of 500.

Values 0 to 300 Events

Normal Display

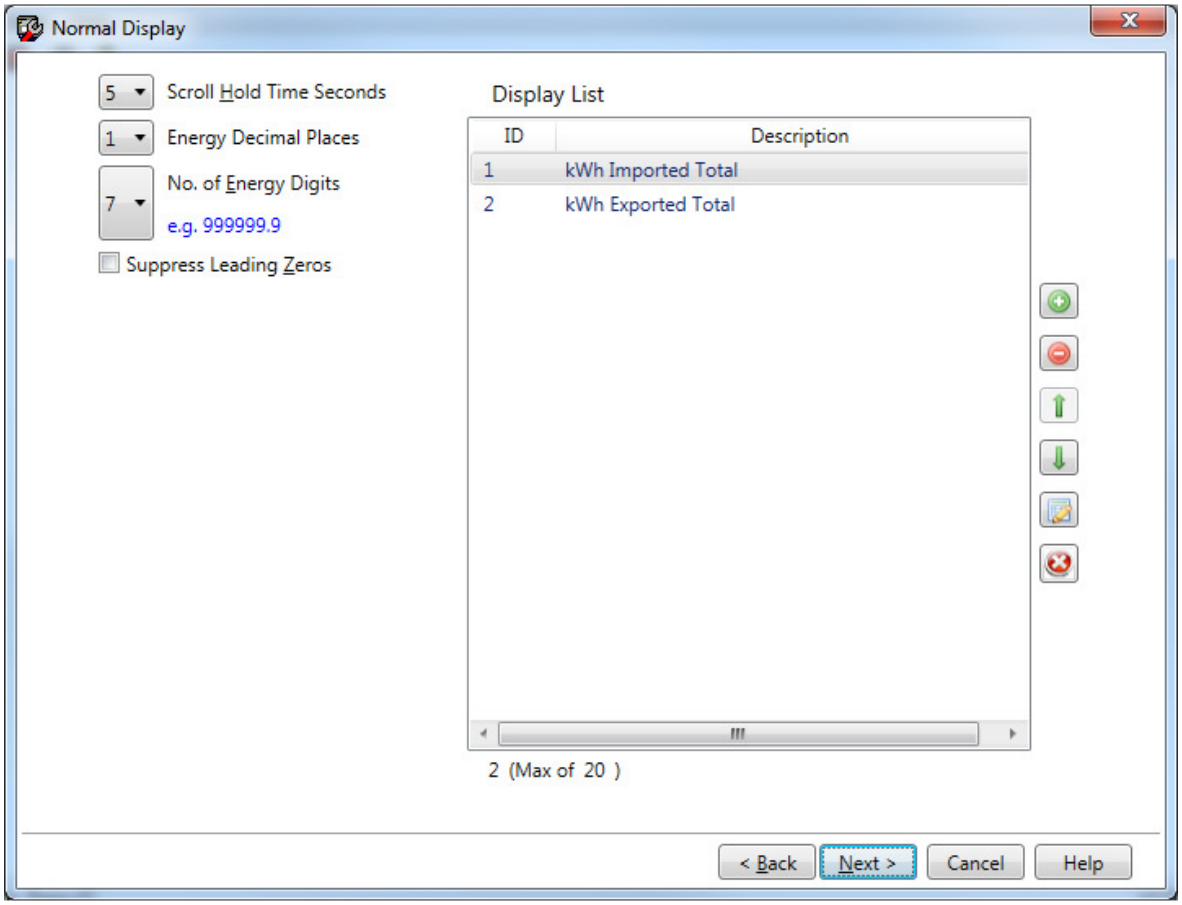

Figure 5.7 Screen 8 - Display

The programmable selections on the 'U1200 Display' screen allow the user to program the LCD to display the items required in any order.

Screen 3 provides one window for *Display List*. The items to include are available from the ***Green Plus*** *icon* button (bottom-most) which pops up the *Pickup display item*. The *Red minus icon* button will delete the items on the display list. The *Up and Down arrow icon* are used to move the items up and down the display list. The *Pickup List* contains the available items while the *Display List* contains those items added for display. The full list of items available is given in Table 3.1 below.

The order of the display items in the meter display cycle can be altered according to the user's choice. For the small number of items available for display the identifiers provided for each item and the sequence in which they appear clearly indicate the item displayed.

The date format is fixed at Day/Month/Year (DD/MM/YY).

Display test
Date
Time
Account ID Digits 24-26
Account ID Digits 16-23
Account ID digits 8-15
Account ID digits 0-7
Serial No. first 5
Serial No. Last 5
Program File number
Number of power Outages
Duration of all outages
Start time of Last Power outage
Start date of last power outage
Error
Warnings
kWh Imported Element 1
kWh Imported Element 2
kWh Exported Element 1
kWh Exported Element 2

Table 5.3 Display Items Available (Pick List)

Note: The above list is a typical list and is subject to change. Please refer to the EMPWin+ software for a more comprehensive list.

SCROLL HOLD TIME

Description The time, in seconds, for which each display option is shown on the meter display during the scroll sequence when the meter is set to automatically scroll. Typically this is set to five or six seconds.

Values Integer between 1 and 8, default is 6

ENERGY DECIMAL PLACES

Description The number of decimal places displayed when an energy value is displayed. The higher the number of decimal places the quicker the register readings wrap around.

Values 0, 1, 2, 3; default is 1

NO. OF ENERGY DIGITS

Description The U1200 meter can display up to 7 energy digits (includes the decimal places). It is recommended that all 7 digits be used to maintain the longest period before the register rollover occurs.

Values 5 to 7; default is 7

SUPPRESS LEADING ZEROS

Description The display can be set to remove any leading zeros when an energy value is displayed.

Values Checked or unchecked; default is checked

ADDING AND DELETING METER DISPLAY ITEMS

To add a new item, click the Plus icon, which pops up the Pickup display item window. Select an item that is required and enter or verify the display ID in the box provided to the right side of the same window and then click on the Add button. It is to be noted that only one item can be selected at a time. The item will be added to the Display List.

If the *Display List* is not empty it is good practice to clear the list before entering your own list. This will ensure no unwanted displays are entered. Individual item can be deleted by highlighting the item on the display list and clicking the minus icon.

Click *Next* at the bottom of the screen to move onto the next screen.

Alternative 1 and 2 Display

Alternative 1 and 2 Display are 2 additional Display screens which, when selected, will appear identical to the 'Normal Display List' with the name of the list changed to 'Alternate 1 Display ' or 'Alternate 2 Display'. The 'Pick List' and the following operations are the same for all 3 and can allow up to 20 items in the normal display list and 10 items in each of the Alternate display lists.

Relay Setting

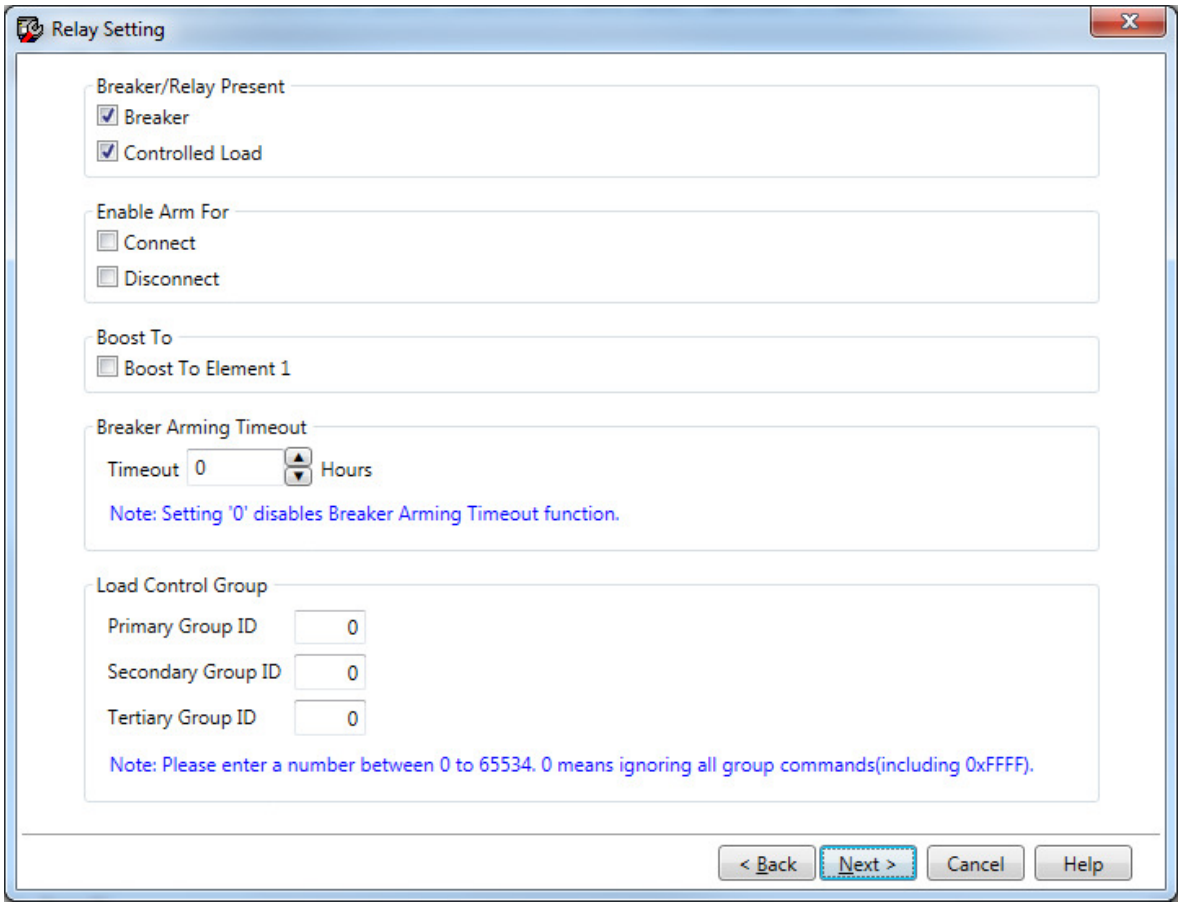

Breaker/Relay Present

Enables breaker and load control relay functionality.

> The meter will ignore all breaker or relay commands, both internal & external, if the box is not ticked.
>
> When changing these settings the breaker or relay will remain in the position they were at the time of the program download.

Enable Arm

Enable arming of the disconnect breaker. If arming is enabled, pressing and holding button 2 on the meter is required to complete the remote operation of the disconnect breaker.

Breaker Arming Timeout

There has been an option added in the R4.8 release to allow the Breaker ARMed state to be automatically terminated if the Alt2 button has not been used to complete the Breaker operation within a specified time period. The Breaker Arming Timeout value is in the Relay Settings page of MeterDev. If 0 is selected then Breaker Arming operation will be the same as in all previous F/W builds which means the Alt2 button must be pressed to complete the Breaker operation. The timeout can be set in hours from 0 to 48. If a power outage occurs during the Arming timeout period then on power up the remaining time will be reduced by the outage

duration period (provided the outage was for at least one minute). If the ARMing timeout period expires then an event will be logged and the meter display. returns to the Normal Display list in the meter. **The Breaker will remain in the same state as it was prior to the ARMing command being sent to the meter.**

Sending the same Breaker operation command while in the ARMed state, will cause the ARMing timeout period to restart again. If the opposite Breaker command is sent then ARMed state is terminated without the Breaker switching. If the Breaker ARMing timeout value is Partially Programmed then any currently active ARMed Breaker action will be terminated without the Breaker

Load Control Group

This will assign the meter to an initial control group (Load Control Groups are used for broadcast commands to control the LC relays in the grouped meters with a single remote communication request).

Supply Capacity Limit

Supply Capacity Control

The meter can configure two supply capacity limit settings – a normal limit (includes imported and exported energy) and an emergency limit.

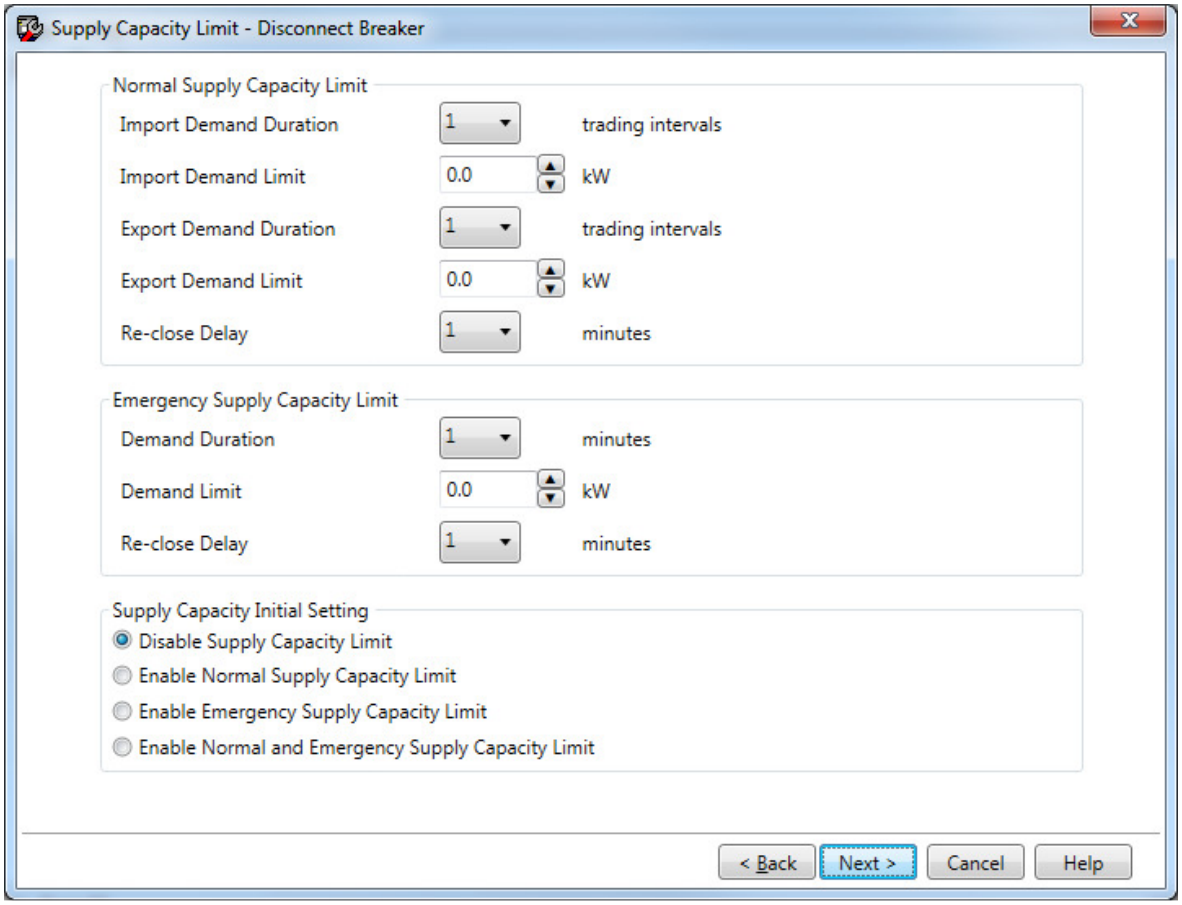

Any program change (full or partial) will reset all timer values for trading intervals and demand duration in order to maintain correct operation after program has been changed.

Normal supply capacity limit

The normal supply capacity limit includes limits for exported energy and imported energy. The parameters included for each of the energy are demand limit, demand duration in 30 minute trading periods, reclose time.

Import Demand Duration

Description	The number of 30 minute trading periods, synchronised to the clock hour and half hour, during which the average imported KW demand is calculated.
Values	1 to 10, increments of 1 trading period synchronised to the hour and half hour

Import Demand Limit

Description	The imported energy demand limit above which the supply contactor (disconnect breaker) opens. For F/W version R3.0 onwards the Demand limit is checked every minute within the current 30 minute Trading period.
Values	0 to 99 kW in increments of 0.5 kW

Export Demand Duration

Description	The number of 30 minute trading periods during which the average exported KW demand is calculated.
Values	1 to 10, increments of 1 trading period synchronised to the hour and half hour

Export Demand Limit

Description	If the meter's total measured load in watts exceeds this specified value then the disconnect breaker will open.
Values	0 to 99 kW in increments of 0.5 kW

Reclose Time

Description	On exceeding the normal supply capacity demand limit for either import or export load limits, the supply contactor (disconnect breaker) opens for the specified time period (in minutes) and then closes again. This time period during which the supply contactor (disconnect breaker) remains open before it recloses is referred as the reclose time.
Note:	There is a new display option that has been made available to support the SCC Re-close Timer countdown value. It is only made available in the Normal Display list. It is shown as either 'SCC t' or with the remaining Breaker reclose time in hh.mm.ss format. When the Breaker has been opened due to a Supply Capacity Control operation the meter will now display how long before the Breaker will reclose. The displayed item is a clock countdown value and when it reaches 00.00.00 the Breaker reclose operation will start. The SCC t (SCC Remaining Time display) item must be manually selected to be part of the Normal Display list. If it is selected to be part of the Normal Display list, when it is not activated it will be displayed as 'SCC t' in the Normal Display. If SCC opens the Breaker then the next time the Normal Display reaches the SCC t, the display will lock on this and the remaining time before the Breaker recloses will be continually displayed. Manual scrolling through the other display items is still supported even while the countdown is running.
Values	1 to 60, in 1 minute increments

Emergency Supply Capacity Limit

The emergency supply capacity limit for Import energy includes parameters such as demand limit, demand duration, reclose time.

Import Demand Duration

Description	The time period (in minutes) across which the average kW of imported energy is calculated.
Values	1 to 60, increments of 1 minute

Imported Demand Limit

Description	The emergency supply capacity limit required to calculate the average kW of energy imported from the network across a certain time period, above which the supply contactor (disconnect breaker) opens.
Values	0 to 99 kW in increments of 0.5 kW

Reclose Time

Description	On exceeding the emergency supply capacity demand limit, the supply contactor (disconnect breaker) opens for the duration of the specified time period (in minutes) and then recloses again. This time period during which the supply contactor remains open before it closes again is referred to Reclose Time.
Note:	The note that is mentioned in Export Demand Limit above is also applicable Imported demand Limit as well for Reclose time.
Values	1 to 60, in 1 minute increments

Supply Capacity Initial Setting

Only one tick box can be active.

Disable Supply Capacity Limit

Description	Disable the function.

Enable Normal Supply Capacity Limit

Description	Enable the function Normal Supply Capacity Limit.

Enable Emergency Supply Capacity Limit

Description	Enable the function Emergency Supply Capacity Limit.

Enable Normal and Emergency Supply Capacity Limit

Description	Enable both features at the same time for checking. The Normal SCC trigger is checked first and if not triggered then the ESCC method is checked.

Auto Disconnect

The auto-disconnect (AD) functionality of the breaker is activated as a conditional sequence of an external reconnection command. This function requires a remote breaker reconnect to start the Watts import load versus limit checking.

If the Watts specified in the program exceed the limit for the length of the programmed breach period (during the monitoring period after a remote Breaker reconnect) then the breaker will disconnect, otherwise the breaker will remain connected and the process will terminate at the end of the monitoring period.

If a power outage occurs during the monitoring period and the breaker is still connected then on power restore the process will start again as if the reconnect command was just received.
If the breaker is disconnected due to the auto-disconnect trigger and then an outage occurs the breaker will remain disconnected when the power is restored and a new external reconnect command will need to be sent to restart the process.

The auto-disconnect process when initiated, takes precedence over the Supply Capacity Control processes defined above.

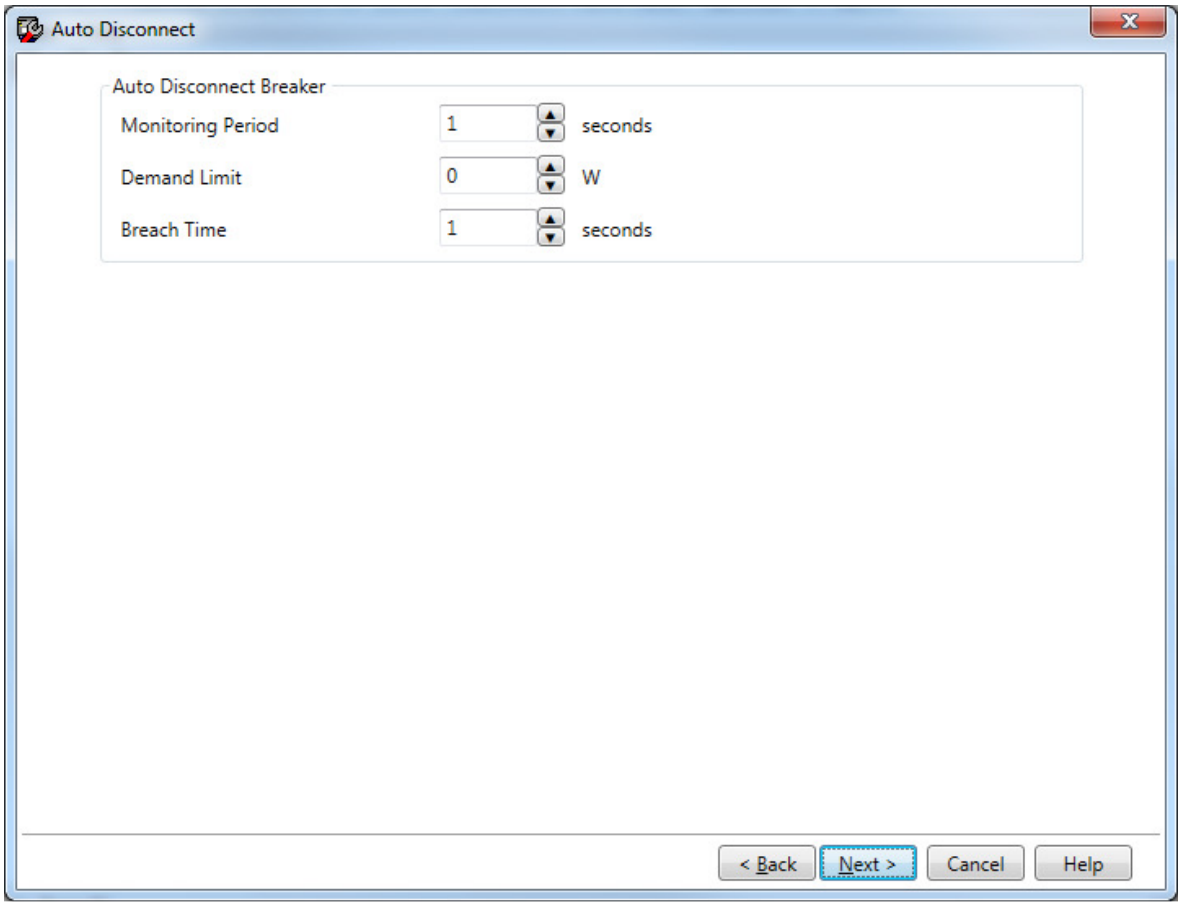

Monitoring Period

Description	The monitoring period is the time after a remote reconnection has occurred.
Values	1 to 3600 seconds, increments of 1

Demand Limit

Description	Demand limit (Watts). If the watts exceed this specified value the Breaker will be disconnected.
Values	0 to 2500 W in increments of 20, if set to 0W this disables the function

The calculation of the Auto Disconnect demand for a two element meter is based on total load. For example if the threshold is set to 30W and element 1 has a load of 16W and element 2 has a load of 14W the meter will disconnect because the total is equal to 30W.

Breach Time

Description	This value represents the minimum time in seconds that the Quantity will be outside of the specified limits before the disconnect occurs.
Values	1 to 3600, in 1 second increments

Load configuration

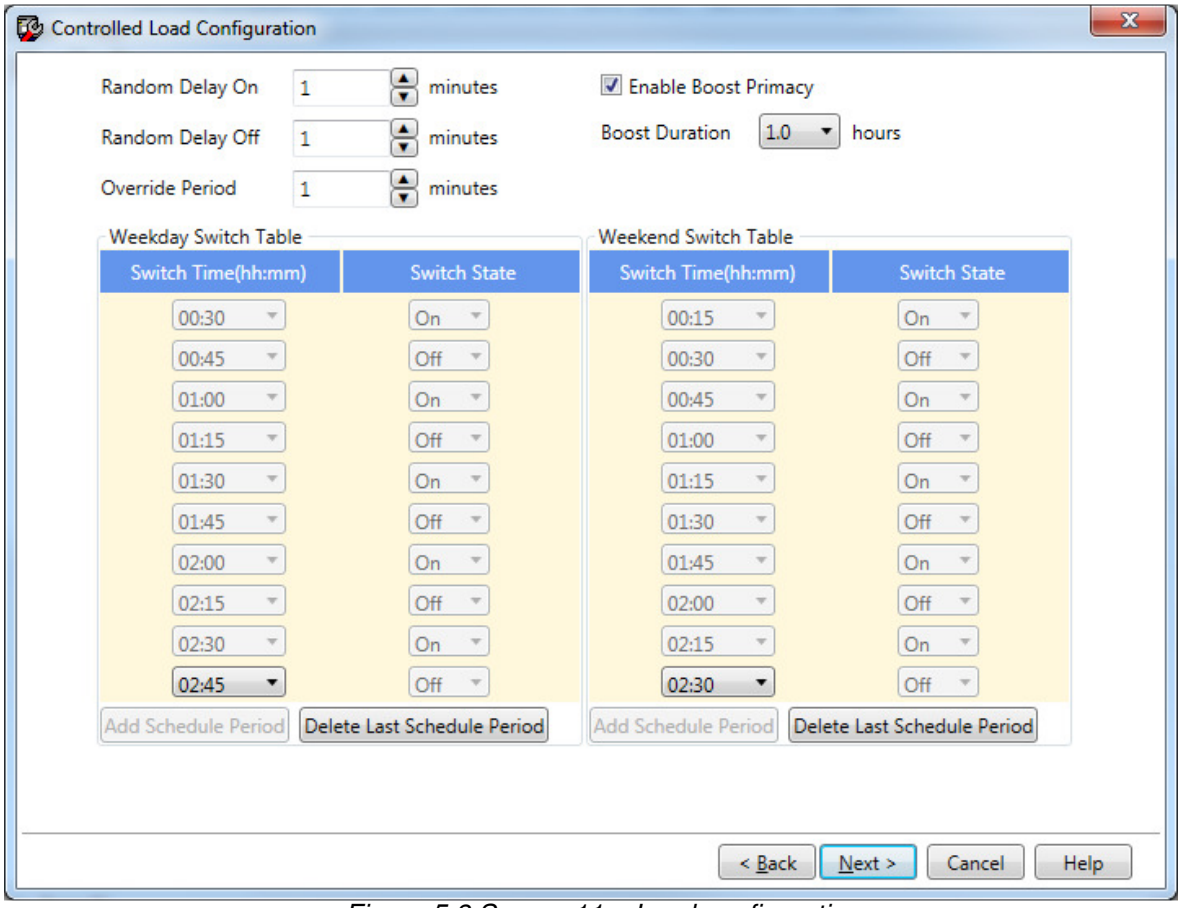

Figure 5.8 Screen 11 – Load configuration

LOAD CONTROL RELAY CONFIGURATION

This Screen provides Scheduled load control configuration with Random Delay and boost functionality for the Load Control relay.

Random Delay provides a random delay of a random value specified within the time interval of 0 to 4 hours. This random delay is settable in 1 minute increments. Random delays are only applied to internal load control schedules or to remote load control operations.

The boost functionality will energise the controlled load for a specified time, from 1 to 6 hours in half hour interval.

RANDOM DELAY ON

Description Upper limit of random delay for all remote or scheduled load control close operations.

Values up to 240 minutes (4 hours) in 1 minute increments; default is 0.

RANDOM DELAY OFF

Description Upper limit of random delay for all remote or scheduled load control open operations.

Values up to 240 minutes (4 hours) in 1 minute increments; default is 0.

OVERRIDE PERIOD

Description This time controls how long a user initiated ToolBox relay command will last for. It operates as a toggle of the relay for the defined time period.

Values 0 to 2880 minutes (48 hours); default is 0.

ENABLE BOOST PRIMACY

Description While the Load Control relay is still under control of a user requested Load Control open operation (not internal Load Control Schedule) and Boost Primacy is enabled then the boost button can be pressed and will close the Load Control Relay for the specified time.

Values check or blank box; default is unchecked.

BOOST DURATION

Description The time required to energise the controlled load for a requisite time which is selectable in 30 minute increments. To disable the boost button set the duration to 0

Values 0 to 360 minutes (6 hours).

WEEK DAY AND WEEK END SWITCHING TABLE

ADD SCHEDULE PERIOD

This section allows entering 5 sets of week day and week end load control switching schedules with Selectable on and off switch times.

The Initial *Add Schedule* button click will add a new switch time entry box and switch state with respective drop downs. The user can select both, the switch period and the switch state (either on or off) for the first schedule that is added. Every other consecutive add schedule will have their switch state field automatically updated, to a state opposite to the previous state. Switching times, are user selectable from the updated drop down list and is incremented by 15 minutes to the previous switch.

For instance if the previous switch time selected is ***02:15*** and state is ***OFF***, by clicking *add schedule period* button, the default new switch time is updated as ***02:30*** and the switch state field will be updated as ***ON*** and is disabled from further state selection***.***

DELETE LAST SCHEDULE PERIOD

This will delete the last schedule that is added to the switch table.

SWITCH TIME

Description The time at which the load control should switch to open or close state.

Values 00:00 to 23:45 (in 15 minutes increments)

SWITCH STATE

Description The load control schedule state. This is only selectable for the first schedule period that is added after which this field is updated and disabled for the user selection.

Values On, off

Event Logging and Alarms

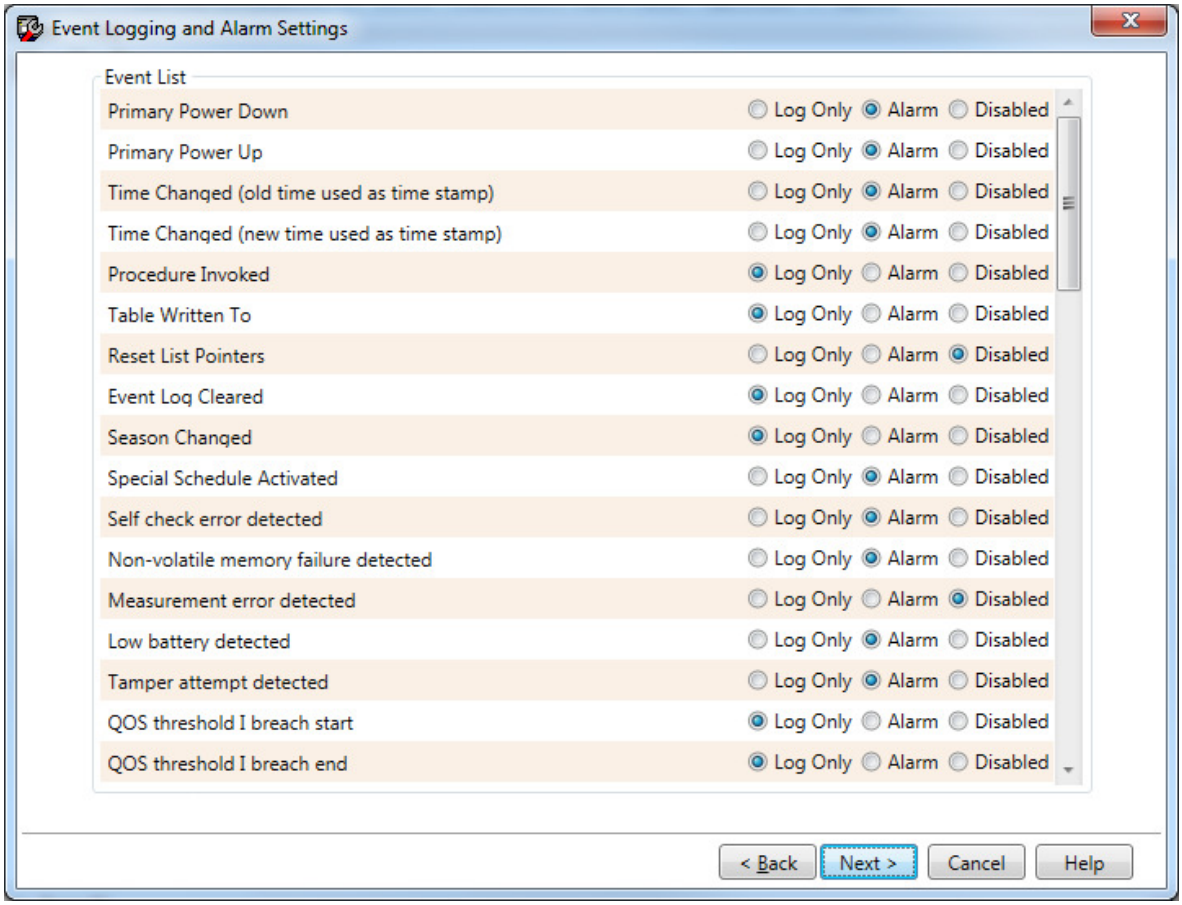

Figure 5.12 Screen 15 – Relay Setting

EVENT STORAGE

The meter will store the last 500 events captured

LOG ONLY

Description Log only- these are able to be viewed in LP or Program read

ALARMS

Description Alarms- this will log as per the log only setting, but it will also alert the communications module that there has been an alarm triggered.

DISABLED

Description Disabled events will not be logged or alarmed.

Program summary

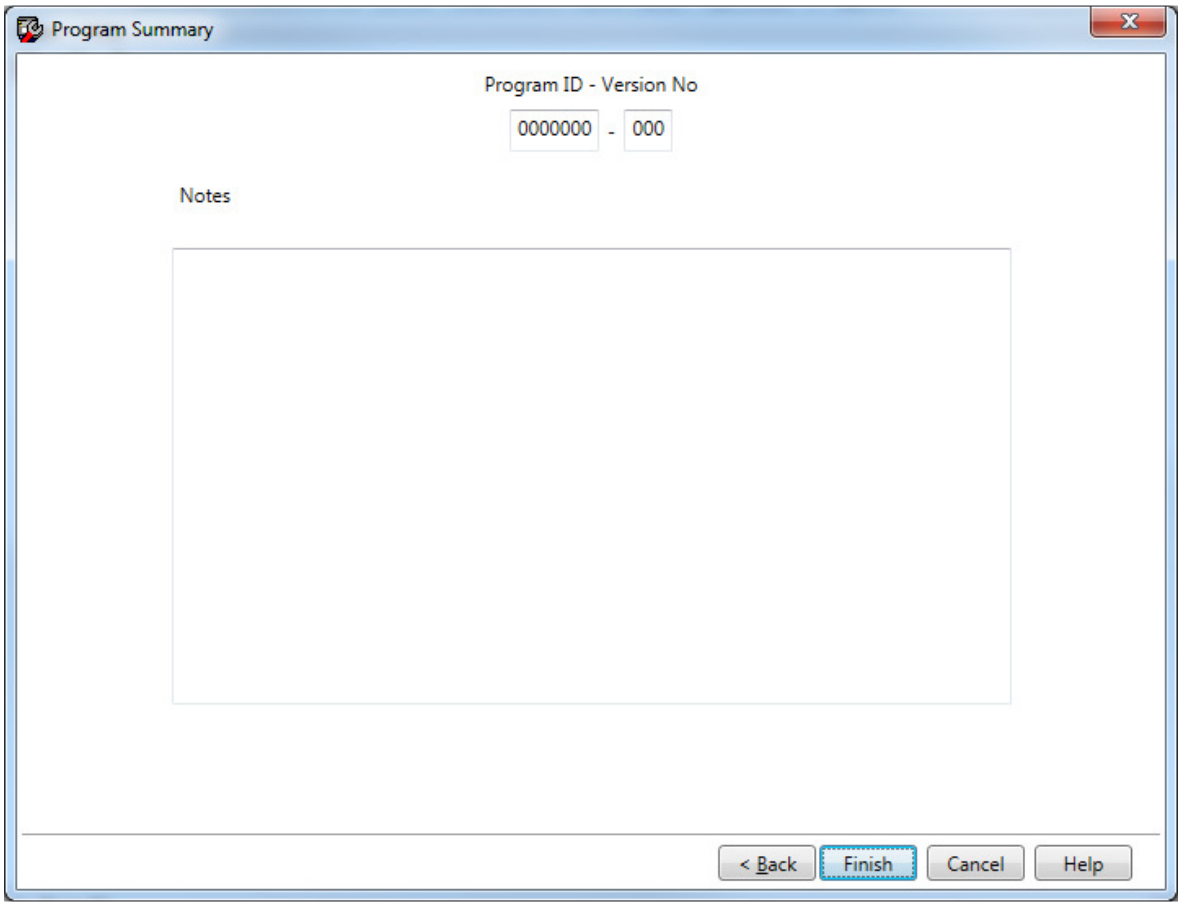

Figure 5.13 Screen 16 - Program Summary

PROGRAM ID - VERSION NO

Description These two numbers are used to identify each meter program that is developed or modified. It is normal to set the Program ID as the actual number and use the version No. to reflect any changes or variations to the basic program. Major changes result in a new Program ID. Alternatively all 7 digits may be used as a single program number.

Values The 7 digit Program ID has a value from 0000000 to 9999999. The version number is an optional value in the range from 0 to 999.

PROGRAM SAVING

The program should be checked and, if satisfied, click the *Finish* button.

Once the program is saved, another screen pops up to select the template to view the meter developer program. The user can either select the default template available in the EMPWin+ folder.

Security

The U1200 meter can store three (3) different passwords. These are called, Full Access Password, Restricted Password 1, and Restricted Password 2.

The Full Access Password allows full access rights which cannot be altered. The access settings for the restricted passwords are completely programmable and interdependent of each other. There is a hierarchical relationship in the restricted passwords.

Password Hierarchy	
Access Level	**Description**
Full Access	Full utility access to the meter.
Restricted 2	Restricted password two is fully configurable to allow access to specific data and functions.
Restricted 1	Restricted password one has the same functionality as Restricted password two and is the lowest level of password access. Parameters selected for access in Restricted one password also need to be selected in password two.

Table 5.3 Password Hierarchy

Programming the meter requires the use of the meter's Full Access Password which allows unrestricted access to all of the meter's programmable features. The restricted passwords will allow lower levels of access to the meter, e.g. for reading billing or load profile information and setting/correcting the meter's time.

Associated with the passwords is a lockout facility. This is activated after three (3) consecutive incorrect attempts to access the meter and prevents any access for a 1 hour period.

The meter can also be programmed to reset this lockout by power cycling the meter. Eliminating the need to wait the 1 hour period for the meter to reset.

EMPWIN+ security access

The Meter System Supervisor should have complete control over EMSecure and its associated functions. An *Administration Password* is required for access to EMSecure and this should be setup and held by the Meter System Supervisor at the time EMSecure is installed. The Administration Password is an alphanumeric code up to 30 characters.

All password allocations are under the Meter System Supervisor's control using the Security Program with the Administration Password. This access allows the Meter System Supervisor to set up all Meter Password Groups and the Users (with their individual User Name and User Passwords) who are to have access to those meters.

The Meter System Supervisor produces a database when he runs the EMPWin+ Security program, EMSecure. The default name of this database is *emsecure.mdb.* For each individual User, the Meter System Supervisor should include a copy of this system database in the same directory as he installs the individual User's copy of the EMPWin+ programs allocated to him (refer to the EMPWin+ User Manual for installation details). The default directory for the location of this database is C:\Program Files\Email Metering\EMPWin

If the password system is not required, installing EMPWin+ without the database will cause the software to adopt the default password and no access passwords will be requested. This will require all meters to have the default password (00000000) or access will not be allowed. A more detailed explanation of the Meter Security System is given in the EMPWin+ User Manual

NOTE: 1.The same Administration Password, Meter Group Passwords and User Passwords should be used each time EMPWin+ is upgraded to the next version. This is done by retaining the old version of the Security database (emsecure.mdb). A prompt for this is given each time the EMSecure program is to be updated.

2. The Administration Password can be changed from within the EMSecure program (File/Change Password). When the program is first installed the default password should be changed immediately.

3. Entering a blank password eliminates the requirement for password entry and anyone can get access to the security system if this is done.

Detailed instructions for installing and upgrading the EMPWin+ Security Program (EMSecure) are given in the EMPWin+ User Manual.

METER PASSWORDS

Access to a particular meter can only be obtained if the User has an allocated password which is one of the 3 passwords used by that meter. The User need not know the actual password he is using, only the name of the Meter Group he has been authorised to access.

The following parameters are required for the EMSecure program only:

GROUP NAME

Description	The name of the Meter Group allocated by the Meter System Supervisor. As explained above each group has 3 meter passwords which can be programmed into Groups of meters. If the meter system uses only one set of meter passwords then only one group name need be created.
Values	Up to 30 alphanumeric characters (case sensitive)

USER NAME

Description The name allocated by the Meter System Supervisor to an individual who has access to the Meter System. The User Name and User Password are a password combination which must be entered by the User to gain access to the software for communicating with the meters.

Values Up to 30 alphanumeric characters (case sensitive)

USER PASSWORD

Description The password allocated by the Meter System Supervisor to an individual who has access to the Meter System. This is coupled with the above User Name and is required for access to the EMPWin+ Communications program.

Values Up to 10 alphanumeric characters (case sensitive)

FULL ACCESS PASSWORD

The Full Access password must be used when performing full programming of a meter. The restricted passwords should be made available to other Users who do not need full read/write access to the meter. The meter passwords consist of 8 numeric digits in the range from 0 to 9. Meters with the default Landis+Gyr program will have the Full Access password of 00000000.

Description This is the highest level access password for the specified meter group. Authorised main password users have full read/write access rights to carry out all types of meter reading, control, configuration and program modifications for the specified meter group.

Values Integer number must be 8 digits.

RESTRICTED PASSWORD 1 AND 2

These two passwords and their associated list of Toolbox / Data Read access and Program Configuration access can be independently configured, however they need to follow the hierarchical order as described in Table 5.3. If the meter is accessed with a restricted password then the meter will determine what functions are permitted. For example, if the meter is accessed with Restricted1 (which might have been configured to disable time/date updates) then it doesn't matter what communication software is used, the meter will not allow its time or date to be modified.

Description A separate list of Meter Programming Access and Toolbox Function Access rights for each of the restricted password levels can be programmed by the Meter System Supervisor (Administration Password holder) only, see Security program below.

Values Integer number must be 8 digits.

Chapter 7
Using the meter on-site

This chapter describes how to read the meter on-site and how to use the buttons and LED indicators. This chapter details status codes on the meter display.

Layout

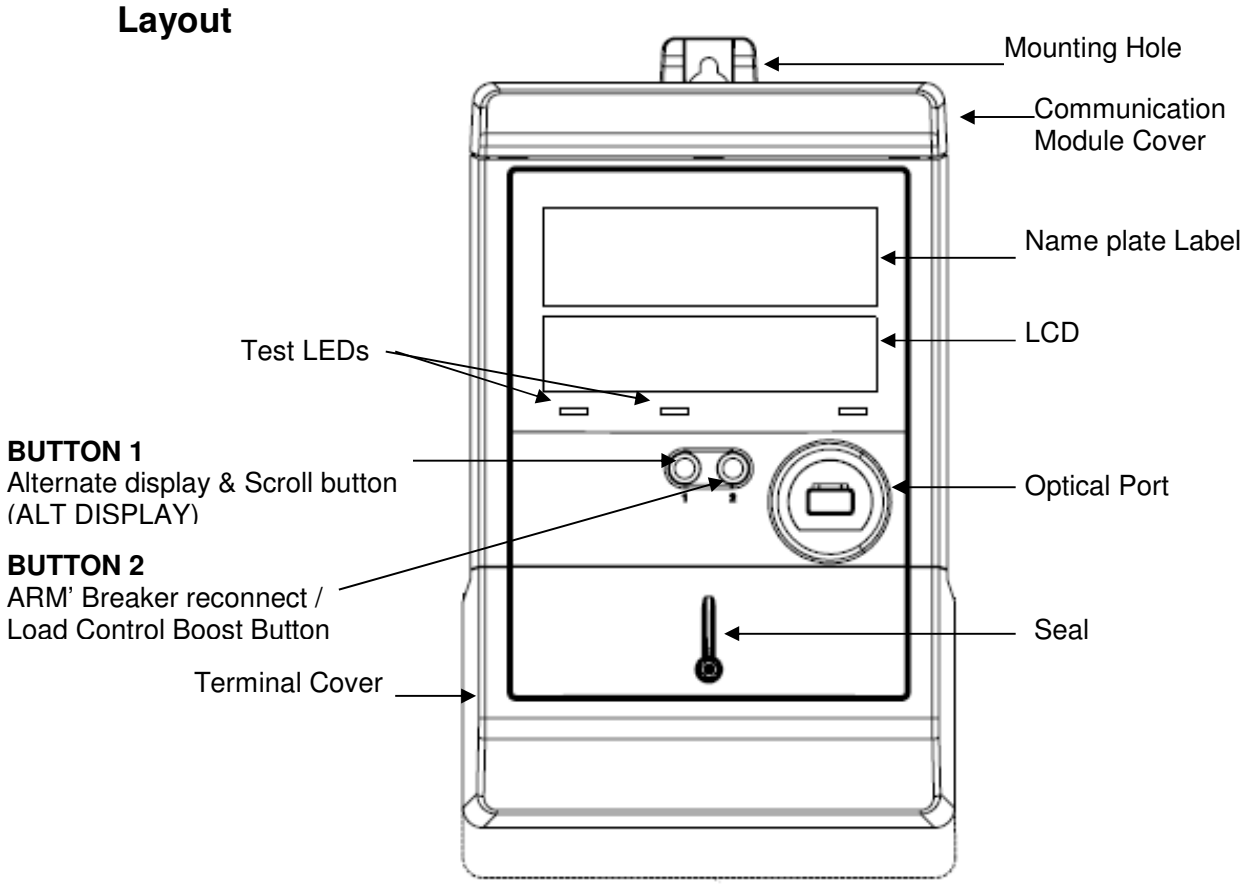

Figure 6.1 The U1200 Meter Layout

The Nameplate Label provides all required meter ratings and can include the utility or meter supplier's registered name and logo. The variable data such as meter property numbers is inserted in the area provided (bar-coded) with a clear plastic 'non-removable' clip-in cover.

The LCD digital display is highly contrast wide angle liquid crystal display (LCD). The custom designed LCD can be read in a wide range of lighting conditions. It has been designed to provide optimum viewing with the meter mounted at eye level and above, in accordance with normal utility practices. However, excellent viewing is available for large variations in angle, both indoors or in full sunlight.

The LCD displayable items are provided in a later part of this chapter.

The ***Consumption Indicators*** (Test LEDs) are two red Light Emitting Diodes (LEDs) pulsing at a rate proportional to the measured load. The meter constant is set at 1 watt-hour and 1 varh per pulse.

Energy LED's - The front panel of the meter, features 2 LED's for testing purpose. The Visible red colour LEDs are used for showing either active (kWh) or reactive energy pulses (KVARh).

Button 1 – This button allows the reader to scroll through the available display items. To move along the sequence quickly, the button should be pressed multiple times until the required display is located. To select the alternate displays the button must be held for 2 seconds. **Button 2 –** This button allows the user to reconnect the supply when in an armed state or activate the boost function (where enabled).

The *Optical Port* is the ***ANSI*** Type-2 standard for two way communication with the metering device, for programming and the collecting meter data, using a laptop or handheld fitted with an ANSI optical probe.

Mechanical security is provided by the ***Meter Terminal Cover*** and sealing device. Sealing of the meter is required for security and to prevent unauthorised access or opening of the meter. A verification marking has been provided on these seals as it is required by NMI. There is a sealing provision of Φ2.4mm hole for main cover, terminal cover and a Φ1.0mm for communications cover. (Maun seals are supplied as a standard on the U1200 meter).

Reading the Display

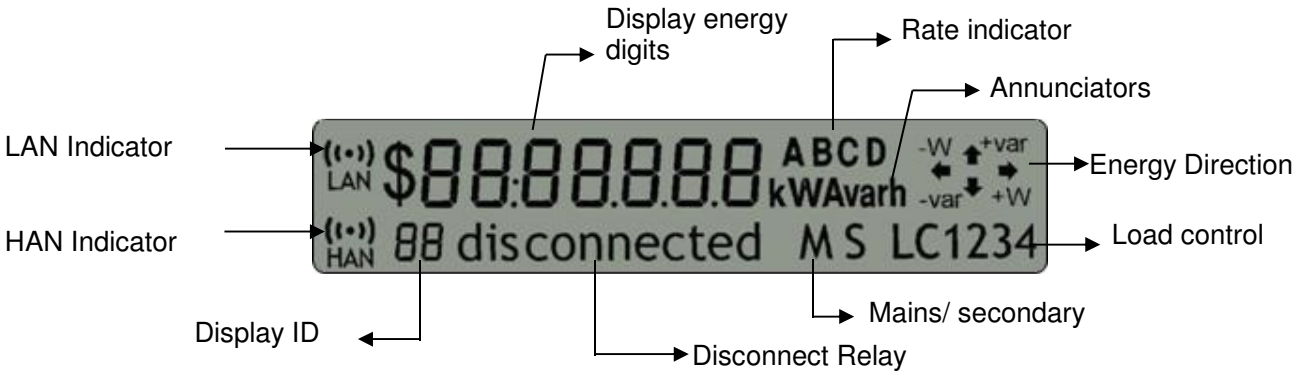

Figure 6.2 U1200 LCD Display

The meter uses the following items to show the display options:

- Display ID **-** A two-digit number identifies the display value.
- Value - The value on the display, gives the energy values consumed during the current billing period and other information like date, time, program ID, Revision numbers, etc. Sections of the Value are sometimes used to convey extra information such “PF” used in front of the power factor value.
- Annunciators – Various annunciators provide information about the quantity displayed with a unique identification number along with direction of energy with respect to each value displayed to eliminate any possible confusion between similar items. Also information about the energy units like KWh, KVARh etc.

ENERGY DIGITS

The displayed energy values can be customised to:

- Hide or show leading zeros
- Display between 0 to 3 decimal places.

The energy registers are displayed with 7 digits, with up to 3 decimal places depending on the parameter setting.

DISPLAY ITEMS

The meter can sequentially display up to 20 items in the normal display list and 10 items in each of the Alternate display lists. The available display items are given in Table 5.3 (Page 43). The actual items to be displayed and the order of display are selected during programming the meter and can only be altered by reprogramming the meter.

The display can automatically scroll through the configured displayable items, where the hold time for each item can be selected in the range 1 to 8 seconds. For more information on the meter configuration program it is well described in Chapter 6.

USING THE SCROLL/ALT BUTTON

To move along the display sequence quickly, the button should be pressed multiple times until the required display is located.

To select the Alternate display lists (Alt 1 and Alt 2) this buttons needs to be pressed for 2 seconds for Alt 1 and a subsequent 2 seconds for Alt 2.

Reading the status information

The meter uses following annunciators to show the status information either on the display or on the front panel.

- **Disconnected**/ **Connected** – This tells whether the disconnect relay is connected to the premises or not. When the Disconnect relay is closed the word "***connected***" is displayed.
- **LC** - enunciates the status for the Load Control relay. The numbers after 'LC' indicates whether it is the primary or other relays in operation.
- **A, B, C, D -** current tariff rates by which the energy is calculated.
- **MS** – indicates Main and Secondary element.

The other status indicators are communication and energy indicators which are described as follows:

ENERGY DIRECTION ARROWS

The direction of the energy for kW and Kvarh are displayed on the panel with the direction arrows. These arrows are instantaneously updated and will display the direction of the power at every instance of time.

Energy Direction Arrows	
+W	Active energy import (Energy Received from the Utility).
-W	Active energy export (Energy Received from the Customer).
+var	Reactive energy (Kvarh Imported by customer)
-var	Reactive energy (Kvarh Exported by customer)

Table 6.1 Energy Directions

LAN & HAN Indicators

LAN and HAN Indicators	
LAN	The LAN indicator
HAN	The HAN indicator

Table 6.2 Indicators

Note: Both the LAN and HAN indicators are controlled by the installed communications module, and are not configurable in the meter program. Please refer to the relevant Communications Module manual for further details on their operation.

ERRORS

In case of a critical error, the error is displayed on the panel, as part of the normal scroll sequence. The error is displayed irrespective of whether it has been selected for display or not. However it does not prevent viewing/ scrolling of display sequences. Further details on error codes and warning codes, is described later in this chapter.

Event log

An event log is a cyclic buffer in which events are stored synchronously in the order they occur. It is used to record selected events that occur in the meter. The event type and the time of occurrence are stored in the event log.

SORT ORDER

All event logs are "first in, first out" buffer. The entries are stored in the same order as they occur, so the most recent entry is stored last. When reading the log, the entries are given out the same way (oldest entry first).

EVENTS.

The U1200 meter stores up to 500 events in the event log.
Note: A power up and down is counted as two events.

SUPPORTED LOGS

The U1200 support several events such as;

- changes of the clock,
- changes of the configuration,
- clearing of profiles,
- self check errors,
- activation of new parameters,
- activation of new time of use, etc.
- Power quality events
- Power failure events
- Fraud (Tamper) detection events
- Disconnect control event log

The complete list of possible events which can be included in the event management can be found in Appendix B.

STATUS HANDLING

The meter can display Status codes that alert the user to various problems. Though Statuses may indicate severe problems, the meter will still operate. Nevertheless, the data measured and stored may be doubtful. In this case, the meter should be sent to a Landis+Gyr repair centre.

When a critical status occurs, the meter continues to operate and does not lock or freeze the display cycle. These statuses are then cleared only via software with a reset command.

Table 6.3 and 6.4 details the list of status codes.

Table 6.3 Standard Status codes

Code	Description
S1 0001	Cyclic Redundancy Check Sum (CRC)
S1 0040	Clock Error
S1 0100	Low Battery
S1 1000	Tamper Switch Activated
S1 2000	Reverse Energy Detected

Table 6.4 Manufacturing Status codes

Code	Description
S2 0001	Flat Battery
S2 0002	Power Fail Counter Mismatch
S2 0004	Export Energy Detected on Element 1
S2 0008	Export Energy Detected on Element 2

Note: It is possible to have more than one Status reported at one time. Care must be taken when deciphering status codes as they are reported in hexadecimal (base 16)

Example:
1. If the meter reported **S1 0041.** The meter would have a CRC Error and a Clock Error.
2. If the meter reported **S2 000C.** The meter would have Export Energy Detected on Element 1 and Export Energy Detected on Element 2.

Chapter 8
Installation

This chapter describes the mechanical/ physical configurations and installation procedure of the U1200 meter.

Storage and Transport

WARNING

The meter should be stored and transported in its original packing case or an equivalent level of packaging.

The meters should be checked for physical damage after transportation.

Figure 7.1 Storage and Transport

The meters are packaged 6 in a pack for transporting. Larger quantities are generally supplied on pallets with shrink plastic cover.

Safety Considerations

DANGER

Disconnect the supply when installing or servicing a meter

Figure 7.2 Safety Considerations

The meter metrology will accurately measure energy (kilowatt-hour) consumption for voltages in the range of 196 to 276 volts and current range of 40 milli-Amperes to 100A.

To avoid possible damage to the meter, at no time, any voltage in excess of 300 volts should be applied to this meter.

The meter is sealed to maintain the security and prevent unauthorised access or opening of the meter. As per NMI regulation, our approval number has been provided on the seal.

Figure 7.3 Terminal Layout of the U1200 Meter

PRESENCE OF TOUCH CURRENT DURING INSTALLATION

Landis+Gyr reminds installers to be aware that touch currents may be present during the installation of a U1200 meter.

The U1200 meter is double-insulated and designed to operate without a direct earth connection. When double-insulated equipment is connected to mains power, voltage will be present on some accessible conductive parts such as antennas. The presence of this voltage is not abnormal.

Due to the presence of this voltage, a meter installer touching an accessible conductive part may feel a very low current that flows from the conductive part, to the installer and then to ground. This is known as a touch current. The threshold at which an installer can detect a touch current will vary between individuals and according to environmental conditions; in most cases there will be no perception of current.

The U1200 meter is in compliance with the touch current limits of IEC60950-1 and it is therefore verified that it does not present a safety hazard to the installer, nor does it indicate an internal equipment failure.

In order to measure the voltage present on an accessible conductive part, it is important to use a low-impedance multi-meter as a high-impedance multi-meter will provide an incorrect reading.

The voltage present on an antenna, and its associated touch current, can be removed by earthing the antenna, such as by installing it on an earthed metal meter box.

Mechanical Installation

Note: Vertical mounting is not necessary — the U1200 meter can be mounted in any position for convenient reading.

The spacing and layout of main terminals is as per the M1 meter and in accordance with AS1284.11. The normal position for mounting a meter is vertical with the LCD display at approximately head height. The overall meter dimensions are given in Figure 7.4, 7.5 below and in Appendix A. The physical position of the 2 bottom screws is identical to the popular A -11, P1, EM1000, M1, M2 and M3 meter range, minimising, necessary modifications to the metering panel when replacing these meter with the U1200 meter.

Mounting and drilling template

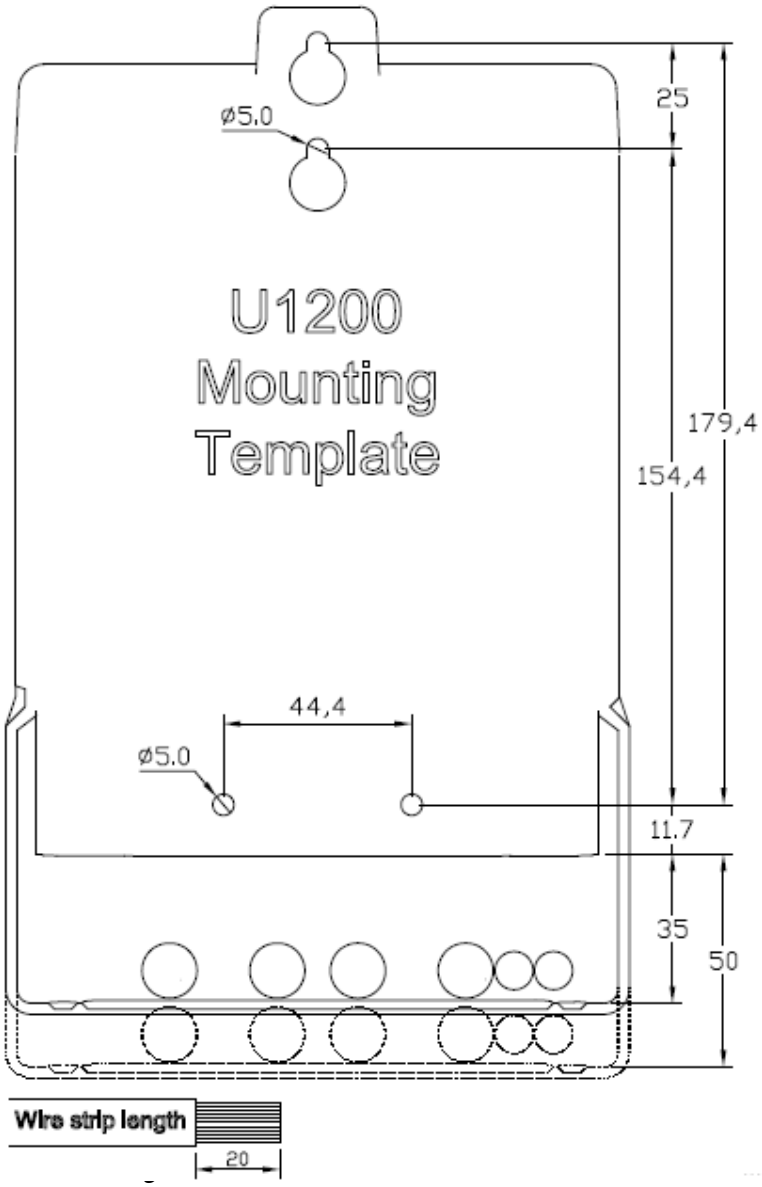

Figure 7.4 Layout of the U1200 Meter

Meter Dimensions

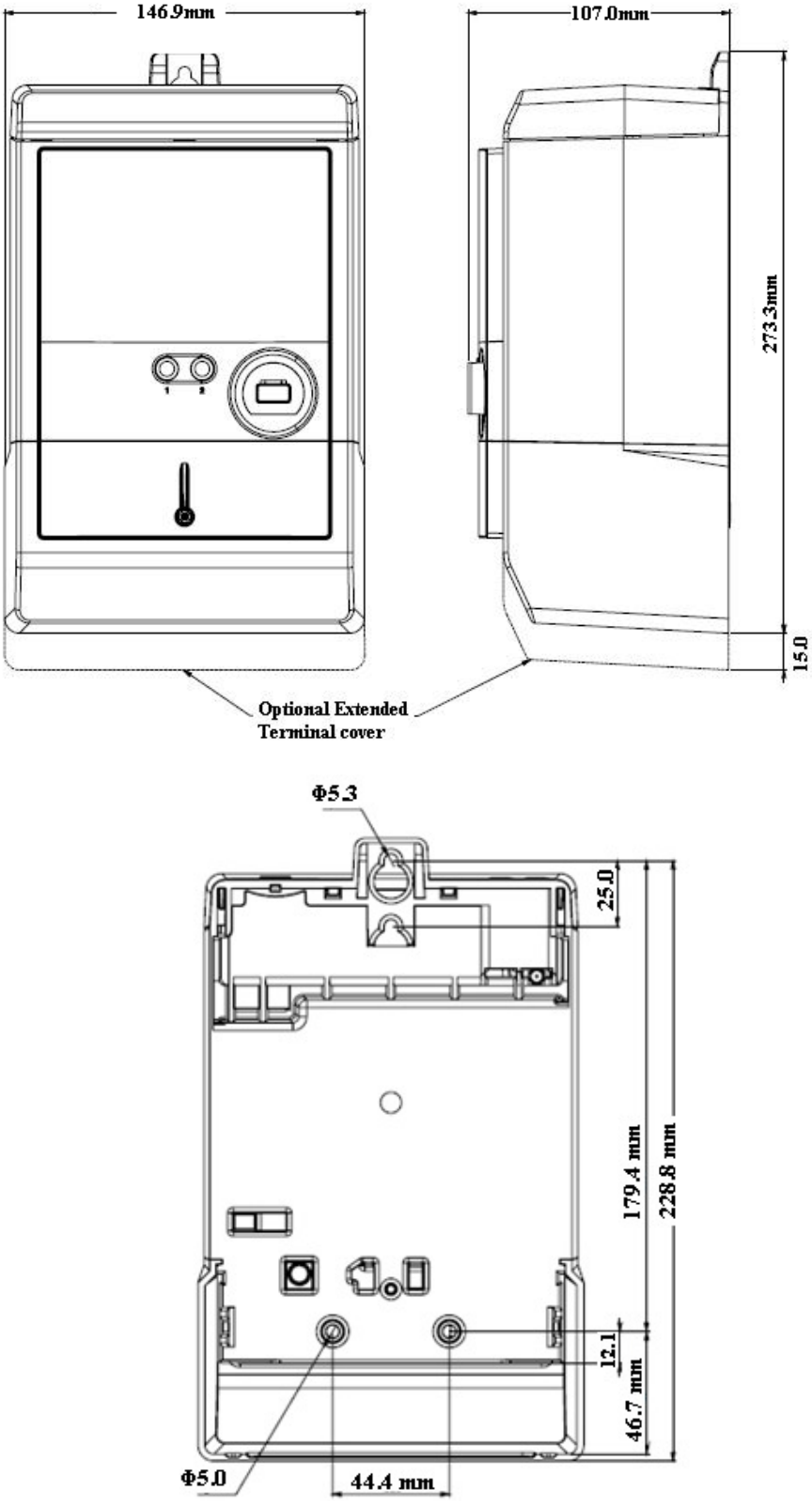

Figure 7.5 Mounting Details for the U1200 Meter

Supply Connections

The U1200 meter connections are shown in the diagram below (Figure 5.6, 5.7 and 5.8)

The meter is a class 1 (to AS 62052.11) 240 volt 10–100 ampere.

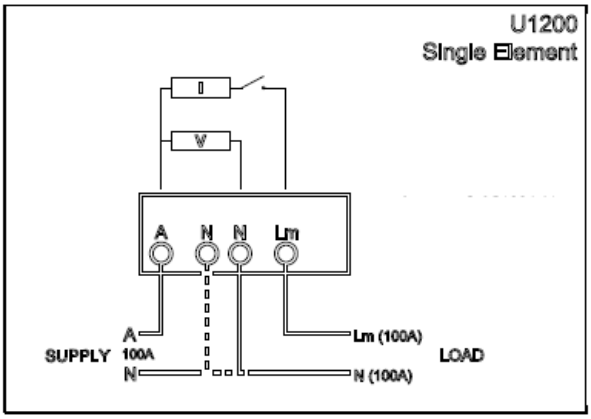

Figure 7.6 Electrical Connections for U1200 Meter – Single Element

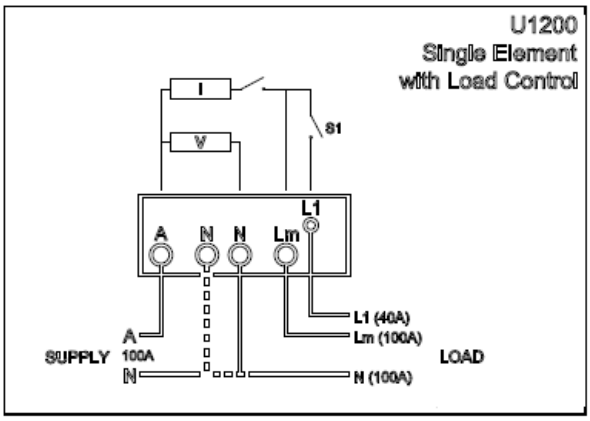

Figure 7.7 Electrical Connections for U1200 Meter – Single Element with Load Control

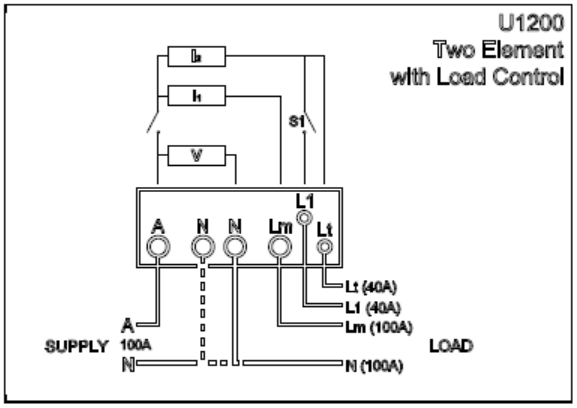

Figure 7.8 Electrical Connections for U1200 Meter – Two Element with Load Control

Note: For a complete set of connection diagrams refer to page 13.

Module installation

The Communication module is plugged into the top section of the meter and covered with the module cover. The module cover has the provision to be sealed to prevent any unauthorised access. Communications modules are hot swappable allowing the utility to insert or remove modules while the meter is powered up. The communications module and compartment is totally intrinsically safe and free of mains voltages. This gives the technician total safety while installing communications modules to the meter and does not require a electrician to install.

The pictorial installation procedure of the module is shown in figure 7.9.

If an external antenna is required to be connected to the communication module, the breakout on the top left of the module cover is removed to allow the antenna cable to run through.

Figure 7.9 LAN Module installation

Appendix A - Specifications

All the meter characteristics and electrical properties are as specified in the below Table A.1 and A.2 for optical port specification.

Table A.1 Meter Properties

OPERATING CHARACTERISTICS	
• Current	(I_b) 10 amperes – (I_{max}) 100 amperes
• Voltage	230/ 240 V -20%, +15% (184 V to 276 V)
• Rated accuracy	Class `1 to AS 62052.11 – 2005 (Active Energy Class 2 (Reactive energy)
• Starting current	0.004 I_b or 40 mA at 240 V
• Creep at no load	No more than 1 pulse
• Voltage element burden	<10 VA, <2W at 240 V
• Typical current element burden	0.07 VA
• Frequency	49 Hz to 51 Hz
• Specified operating Range	-10^{0}C to +60^{0}C
• Limit range of operation	-10^{0}C to +70^{0}C
• Storage temperature	-20°C to +70°C
• Humidity	0 to 95% relative humidity
ABSOLUTE MAXIMUM RATINGS	
• Voltage, short duration	415 V for 1 minute
• Current, short Duration	3000A for 0.5 Cycle
• Insulation withstand	4 kV for 1 minute
• Impulse voltage	10 kV, in accordance with AS62052.11
• Min. Load control Relay switches	30,000
• Min. Disconnect Relay switches	10,000
ENERGY OUTPUT LED	
• Pulse rate	once every 1Wh/ 1 varh
• Program Test LED	Default kvarh

GENERAL CHARACTERISTICS	
• Communication, optical port	• Complies with AS1284.10.2 (ANSI standard interface), 1200 to 38400 baud
• Disconnect Relay	• 100Amp
• Load Control Relay	• Max 40A
• Enclosure construction	• 10% glass filled polycarbonate with ultraviolet and flame retardant stabilisers are used for the U1200 meter base. • The viewing window for the LCD is made of clear ultraviolet stabilised polycarbonate.
• Dimensions	• 238 mm high (253 mm with Extended TC), 147 mm wide, 107 mm deep
• Typical mass	• 1.38 kg
• Energy Register Resolution	• 1 Wh for active energy • 1 varh for reactive energy
• Enclosure rating, AS1939	• Complies with IP53 (without suction)
• Battery life	• 10 + years (mains connected) • 5 years (no main supply)

Table A.2 Communication Port Properties

COMMUNICATION PORTS	
• Optical port Baud Rate	9600 to 38400kbps
• Meter and Communication module	ANSI C12.18/21 Protocol

Appendix B – Event Table

Table B.1 Event Table

Description	
Primary Power Down	Meter power down
Primary Power Up	Meter power up
Time Changed (old time used as time stamp)	Meter time has been changed (time stamped using existing meter time)
Time Changed (new time used as time stamp)	Meter time has been changed (time stamped using new time)
Procedure Invoked	Procedure Invoked
Table Written To	Meter Tables Written To
Reset List Pointers	Reset all pointers to lists
Event Log Cleared	History of events cleared
Season Changed	Changing from one season to another
Special Schedule Activated	TOU special recurring /non recurring dates
Self check error detected	Failed self diagnostics
Non-volatile memory failure detected	Hardware error
Measurement error detected	Error in internal measurement
Low battery detected	Battery level is low
Tamper attempt detected	Terminal cover area has been accessed
QOS threshold I breach start	QOS voltage breach has occurred. Shows voltage and date and time stamp -eg: Triggered value is 260.1 - Maximum breach
QOS threshold I breach end	QOS voltage breach has finished. Shows voltage and date and time stamp - eg: Voltage - Worst value is 261.5 - Maximum breach
Element 1 export energy detected start	E1 greater than the specified value in the program has been exceeded
Element 1 export energy detected end	When energy starts flowing in the imported direction again
Element 2 export energy detected start	E2 greater than the specified value in the program has been exceeded
Element 2 export energy detected end	When energy starts flowing in the imported direction again
Service Disconnect open	Disconnect breaker has been opened
Service Disconnect close	Disconnect breaker has been closed
Service Disconnect armed for open	Disconnect breaker is in the arm state, ready for local user to use button on meter
Service Disconnect armed for close	Disconnect breaker is in the arm state, ready for local user to use button on meter
Controlled Load open	Load control relay has been opened
Controlled Load close	Load control relay has been closed
Primary group command accepted	Primary load control group action accepted from initiated group command
Primary group command rejected	Primary load control group action rejected result from initiated group command
Secondary group command accepted	Secondary load control group action accepted from

	initiated group command
Secondary group command rejected	Secondary load control group action rejected result from initiated group command
Tertiary group command accepted	Tertiary load control group action accepted from initiated group command
Tertiary group command rejected	Tertiary load control group action rejected result from initiated group command
Service Disconnect open due to auto-disconnect	Auto-disconnect breaker disconnected due to criteria exceeded
Service Disconnect open due to supply capacity	Disconnect breaker disconnected due to either the Normal or Emergency supply capacity criteria being exceeded
Service Disconnect close after supply capacity timeout.	Disconnect breaker re-connected due to the supply capacity time out period elapsing
Controlled Load override.	When a communications command has been sent to open the load control relay
Multiple events logged today	50 events logged (which are turned on for logging/alarm)
Controlled Load override timer expired.	The override time specified in the meter program has expired
Controlled Load closed due to boost.	Boost button pressed and relay has closed
Reprogramming	The meter has been partially or fully programmed
Scroll button pressed	Button 1 pressed to scroll displayable items
Alt button pressed	Button 1 pressed for a minimum of 1sec to enable the alternate displays
Boost button pressed	Button 2 pressed for a countdown period 3 seconds to initiate the boost function
Service Disconnect close acknowledged	Following an arm state- button has been pressed
Service Disconnect open acknowledged	Following an arm state- button has been pressed
Primary group command table write	When data has been written to the load control group tables
Secondary group command table write	When data has been written to the load control group tables
Tertiary group command table write	When data has been written to the load control group tables
Failed password on login	A failed communications attempt via optical port due to an incorrect meter Password
Multiple failed logins	Three or more communication attempts have been made via the optical port with the wrong meter password
Communication lockout events	Optical port has been locked out due to repeated communication attempts using the wrong meter Passwords
Firmware changed	The firmware has been a firmware change in the meter
Master group command accepted	An accepted command to action a relay without grouping eg EMPWin+ toolbox function
Master group command rejected	A rejected command to action a relay without grouping e.g. EMPWin+ toolbox function
Local Parameter Change	Can be any change to the meter via the optical port- tables written to, reprogramming etc
Remote Power Fail	A signal was sent to the communication module to

	indicate mains voltage is lost and the meter is powering down
Communications Update	A message was sent through the optical port to the communication module.
Load Profile Status Change	Used to indicate that load profile recording has been enabled or disabled
Multi Source Tamper	Used to log the start and end of the terminal cover also
Critical Table Changed	Covers primary, secondary or tertiary group ID changes, as well as relay present mask
Extended Breaker State Change	Covers extended breaker control configurations

Appendix C – Regulatory Compliance

Standards Compliance

The U1200 meter complies in full or in part with the following standards relating the Meter hardware, mechanicals, metrology, communication, radio, Radiation/ Protection and other regulatory standards.

Standards	
• **NMI M6**	Pattern Approval and Initial Verification of Electricity Meters and Associated Transformers: Definitions, Metrological and Technical Requirements
• **AS 62053.23-2006**	Electricity metering equipment (ac) - Particular requirements - Static meters for reactive energy (classes 2 and 3)
• **AS1284.10.2 - 2006**	Data exchange for meter reading, tariff and load control — Direct local data exchange via hand-held unit (HHU) — ANSI Standard interface
• **AS 62054.21-2006**	Electricity metering (ac) - Tariff and load control - Particular requirements for time switches
• **AS 62052-11 - 2005**	Electricity metering equipment (AC) – General requirements, tests and test conditions. Part 11: Metering equipment
• **AS 1284.11 — 1995**	Single-phase multifunction watthour meters
• **AS 60529**	Degrees of protection provided by enclosures for electrical equipment
• **AS 4140 — 1995**	Metering and Utility information exchange
• **IEC 62053-61 Ed. 1.0**	Electricity metering equipment (a.c.) - Particular requirements - Part 61: Power consumption and voltage requirements
• **#EGR part D(COP4)**	Electricity GoverLANce Rules of New Zealand – Part D Metering Arrangements.
• **#AS 62053.21-2005**	Electricity metering equipment (AC) - Particular requirements - Static meters for active energy (classes 1 and 2) (IEC 62053 21 Ed.1.0 (2003) MOD)
• **DPI Specification** Release 1.1	Department of Primary Industries ADVANCED METERING INFRASTRUCTURE Minimum AMI Functionality Specification (Victoria) Release 1.1

Table C.1 Regulatory Compliance

APPENDIX D – ACCESSORIES

Table H.1 Accessories

Device part number	Description
CD-EMPWin+	EMPWin+ Software for configuring and reading the U1200 meter.
AIP200	AIP200 Optical Probe (ANSI and IEC) Fitted with 9 Pin D Connector and 1.5 metre Cable
AIP200-USB	AIP200 Optical Probe (ANSI and IEC) with in-built Smart Connect and USB connector on 1.5 metre cable
849367	U1200 Short terminal Cover Assembly
849370	U1200 Long terminal Cover Assembly
849353	U1200 Communications Cover
848383-A2	U1200 Communications Cover 2 Aerial Tabs Removed

Appendix G – Glossary

AMI – Advanced Metering Infrastructure

ANSI – American National Standards Institute

LAN – Local Area Network

HAN – Home Area Network

LC – Load Control

LP – Load Profile

LED – Light Emitting Diode

IEC – International Electrotechnical Commission

AS – Australian Standard

LCD – Liquid Crystal Display

IEEE – Institute of Electrical and Electronics Engineering

RTC – Real Time Clock

EST – Eastern Standard Time

NZT – New Zealand standard Time

EEPROM – Electrically Erasable Programmable Read Only Memory

RF – Radio Frequency

RED – Reverse Energy Detection

PV – Photo Voltaic

IHD – In Home Display

TCP/ IP – Transmission Control Protocol/ Internet Protocol

NMS – Network Management System

PCB – Printed Circuit Board

ISM – Industrial, Scientific and Medical

ESP – Energy Service Portal